THE

TECHNICAL HISTORY OF THE PLAYER

BY

JOHN McTAMMANY
THE INVENTOR OF THE PLAYER PIANO

$1995

BANDSTAND

ANTIQUE MUSIC & ARCADE MACHINES
222 W. 12th St. L.A. 90015
748-7920

Digitized by the Internet Archive
in 2024

https://archive.org/details/technicalhistory0000john

THE BLUMENBERG PRESS
NEW YORK

THE

TECHNICAL HISTORY OF THE PLAYER

BY

JOHN McTAMMANY
THE INVENTOR OF THE PLAYER PIANO

WITH INTRODUCTION BY
WILLIAM GEPPERT
EDITOR OF THE MUSICAL COURIER EXTRA

NEW YORK CITY:
THE MUSICAL COURIER COMPANY
1915

COPYRIGHT
1915
THE MUSICAL COURIER COMPANY

The original copy of this book was owned by Charles Fuller Stoddard, the inventor of the Ampico. It is now in the personal library of Larry Givens of Wexford, Pennsylvania, who made it available to the Vestal Press for reprinting that all those interested in the history of the player piano might benefit from the fascinating documentary of its contents.

The Vestal Press specializes in books and reprints in the field of mechanical music. A free catalog of all its publications will be sent upon request; address inquiries to the Vestal Press, Dept. MC, Vestal, N. Y. 13850

INTRODUCTORY

BY WILLIAM GEPPERT

IN penning this preface to the TECHNICAL HISTORY OF THE PLAYER, by John McTammany, the writer has no desire to enlarge upon the work itself, nor is it necessary, in this forecast, to refer to the various stages in the evolutionary process of the player's development; but in writing this book John McTammany has religiously refrained from recording many things of interest to the trade, and especially matters of a personal character that should be of interest to the public at large.

Regarding his history and personality, and regarding much of the trouble and tribulation that he endured during the forty years that it has taken for the player to reach its present state of perfection, he is silent. Of his present condition and future prospects he says nothing, yet the trade cannot treat with unconcern the future welfare of the man to whom they are morally so much indebted. So, for the benefit of those who have not read McTammany's HISTORY OF THE PLAYER, or do not have the honor to be acquainted with the old inventor, I have taken the liberty to recall briefly a few of the important incidents of his life and work, and also to touch upon his personality and human characteristics.

If any apology be necessary for the length of this introductory, let the reader bear in mind that the player has been the subject of an acrimonious controversy extending over a period of forty years, during which time it has raged in the Patent Office, disrupted the courts and clogged the pages of the press; has proved, in fact, an issue that has staggered the Supreme Court, convulsed Congress, engaged the attention of the President and demanded the amendment of the Federal laws, to say nothing of the expenditure by the trade of millions of dollars. Therefore it is not a matter that can be disposed of with a word or explained within the limits of the conventional preface.

Much of the newspaper controversy referred to might have been avoided had the definition of the word "player" been properly understood, but the impression had become general that any machine or contrivance containing a perforated device was a player, in accordance with the common acceptance of the term; whereas, there are many machines in general use today that are governed in their operation by means of a perforated sheet, the monotype, recording voting machine and automatic typewriter, for example. All these and many others of a similar character either are the inventions of John McTammany, or their practicability was suggested to their inventors by witnessing the mechanical operations of the player. So for the purpose of this preface and in order to avoid future confusion, I submit the following recognized definition of the word "player":

> What is implied by the terms, inner or inside player, or player piano, is a musical instrument consisting of a casing, two actions and a series of sounding devices within the casing, one of said actions adapted to be operated manually, the other designed to be operated mechanically by means of a perforated sheet on rolls; a wind, spring or other motor for feeding the sheet and winding the rolls, a bellows and mechanism put in motion by it for actuating the sounding devices of the automatic action; foot pedals or power for driving the motor, and means for controlling the tempo and varying the expression.

From the foregoing it will be seen that the player consists of at least fourteen elements or combinations of elements, and the question that arises in this connection is, Who was the first to embody those elements within the wooden walls of the organ or piano and to settle that issue?

John McTammany published his first book on the subject, entitled HISTORY OF THE PLAYER, and it

is over a year since the said volume was issued from the press. Nearly a thousand copies of it have been distributed throughout the United States and Europe, principally to members of the trade, but up to date no man has had the hardihood to challenge the absolute reliability of that book.

A perusal of that work ought to convince any unprejudiced mind of the justice of John McTammany's claim to the invention of the player.

It falls to the lot of but few men to create a new industry, and particularly an industry of international magnitude. The men who have done so were few and far between. John McTammany has not only given birth to a new industry, but, of all the inventions produced during the present and the past century, the player, by reason of its domestic relation and musical supremacy, is easily the greatest, holding the post of honor in the palace of the king and the cabin of the artisan, and no drawing-room is complete without it.

Nor is John McTammany's status as an inventor to be measured by his contribution of the player only. On the contrary, he has not only created one industry, but several, and his name and fame in a number of other arts is as well known and better recognized than has been his position and standing in the musical world.

McTammany's Many Patents

John McTammany counts his patents by the hundred, and his inventions are too numerous for mention here. Many of the leading manufacturing establishments of the country have either employed him in the development of their systems or consulted him in regard to their mechanical affairs.

It follows, therefore, that his inventions and discoveries are not confined to the domain of music, but the principles first discovered by him have been appropriated and applied by others in the development of various other arts. His inventions are of every conceivable character, ranging from agricultural implements to automatic typewriters; and to fully appreciate the versatility of his genius, it is only necessary to contemplate the number and variety of his inventions.

John McTammany was born fifty years ahead of his time, and the man who is born in advance of the times generally has a hard road to travel. His vision reached far beyond his day and generation, and the man who is born ahead of his time must do one of several things, either abandon his purpose, lower himself to the level of the times, or lift the common horde up to his own plane. John McTammany would not bend to trade exigencies; he would not retrace his steps; he would not smother the child of his brain. To compromise was to suffer defeat. He would fight it out on his own line. Capitalists might deny him the means to manufacture the goods in sufficient quantities to supply the demand, and the music trades predicted his failure, but he would not turn back; the soldier would not retreat.

Trials of the Earlier Years

The instrument did not meet with public favor at first, as neither the people, nor the musical profession, nor the piano manufacturers would recognize it; so for ten long years the player had to mark time, as it were, while the piano manufacturers discussed its merits and demerits, and it was not until ten years after John McTammany had exhibited his first player that the trade actually became reconciled to the interior mechanism, McTammany's ideal. From that time, 1886, until the present, the player industry has forged ahead by leaps and bounds, giving employment to an army of skilled mechanics and calling for the investment of millions of dollars, as evidenced by the following extract from the "Patent Review," New York, August, 1906:

> The enormous growth and activity in the manufacture of self-playing instruments at the present time can be paralleled by only one other line of manufacture, namely, the automobile industry, and even this has not expanded as quickly, nor have such widespread changes developed as in the manufacture of automatic musical instruments.

Much of the early opposition to the player has been overcome. There are many who predict that the player will entirely supersede what is known as the straight piano, with the exception of those pianos that will be supplied to the musician who desires to play the instrument manually. Always there will be a demand for what is known as the concert piano, even though the player should practically supersede what the trade designates as the straight piano.

Some Features of the Situation

Another remarkable feature of the player development has been the extraordinary number of patents issued up to date, to say nothing of the applications continually being filed, while the number of different players that have been put upon the market seems almost incredible. Furthermore, the legal tangles that have grown out of the player patents would eclipse anything described by Dick-

ens in "Bleak House." Many volumes of one kind or another bearing upon the subject have been published, sufficient, indeed, to constitute a substantial library, while an army of lawyers and musical and mechanical experts have been steadily employed before the courts, and still the ends of the legal and other complications are not in sight.

John McTammany is tottering down the western declivity of life today, but in looking backward there is only one thing that he seems to regret in this, the hour of his decline, namely, the years, the energy and the money that he was compelled to spend in litigation and controversies growing out of the player complications, feeling that many other epoch-making inventions would stand to his credit today were it not for the fact that he was compelled to spend years in dancing attendance upon courts, lawyers and bailiffs.

The origin of the player, therefore, may be said to date from the fall of 1865, the day when John McTammany, as a United States soldier, lay on a cot in a military hospital of the South, suffering from injuries received in the line of duty, and wondering, like his comrades in misfortune, how he could earn a living in the future.

The First Full-Fledged Player

The first full-fledged player ever constructed was a reed instrument, which was publicly exhibited in the warerooms of Story & Camp, in Olive street, St. Louis, in the spring of 1876, and was minutely described by the press of the country at the time. The opinion of mechanical and musical experts who heard and examined it on that occasion was to the effect that it accomplished the object for which it was designed, to wit: that of an interior player, and that it performed its functions in a manner to warrant further improvement and the employment of sufficient capital to exploit it.

As a commercial proposition, however, it did not appeal to the capitalist and met with but little favor from the people, and like many other great inventions that had preceded, it was consigned to oblivion by the wiseacres of the times.

John McTammany had spent over ten years in its development, having sunk every dollar he could earn, beg or borrow to complete it, and when, in the spring of 1876, his perfected player was finished, he felt that his labors and privations were at an end, and he would receive the reward that his self-sacrifice and labor entitled him to. Therein he was doomed to disappointment, and at least ten years more of trial and tribulation were in store for him. For it was not until 1886, ten years after the exhibition of his first player, that the player industry had become established and its final success assured.

The First Steps Toward the Light.

Before McTammany began the patient course of experiment that culminated in the production of the player and established his claim to being the father of the industry, others had dreamed of some sort of an instrument to be operated by means of a perforated device of one kind or another. All of this is illustrated and described in this work, but not one of these others ever conceived or described anything approaching the modern player in form, design or construction. The nearest approach to it was the supplementary application and amendment to the Fourneaux patent of 1863, amended to use a perforated board in 1871. This invention was not an interior player, but a cabinet keyboard attachment, now obsolete.

We honor, and justly so, the memory of Cristofori, father of the pianoforte, and in like manner we revere the memory of Jonas Chickering and his contemporaries, Erard, Silbermann, Broadwood and others who have contributed in one way and another to the improvement of the pianoforte. But Cristofori's contribution toward the piano's development consisted simply in taking the harpsichord, the piano of our fathers, and substituting a hammer action in lieu of the picking mechanism previously employed. In no other essential respect did he alter the harpsichord.

Just when the harpsichord was invented, and by whom, is shrouded in mystery. Doubtless it was a product of evolution and represents the labor of many men extending over a period of several generations. In form, design, construction and general arrangement of parts, the harpsichord did not differ essentially from the modern grand, but the harpsichord was objectionable because one could not vary the tone, making it soft or loud.

Is This Justice?

Jonas Chickering's greatest contribution to the improvement of the piano consisted in the introduction of the iron plate in the grand. So if we honor the memory of Cristofori by reason of the introduction of the hammer into the harpsichord and erect monuments, write books and celebrate the memory of Jonas Chickering for his contribution of the iron plate, how comes it that the world declined for

so long to recognize John McTammany, who not only improved that which was old, but actually created an entirely new instrument—the player, which constitutes the very foundation and salvation of the industry of today?

Neither Cristofori nor Chickering possessed creative genius. They had talent; they could and did improve on what others had done, but McTammany had creative genius and by reason of that fact was enabled to revolutionize completely the piano art.

John McTammany loved music. He could play the piano and it was a source of pleasure and comfort to him. Others less gifted by nature longed to be able to play also. Their love of music was as deep and intense as that of those who could play, and it was to gratify such as these that he resolved to invent the player. John McTammany could see no good reason why the masses should subject themselves to years of drudgery and expenditure of money in the development of the technic by the human fingers when the same result could be produced by the technic of the piano itself. He could see no reason why men and women absorbed in the affairs of life and deprived of opportunity to study should be denied the blessings of music, when within the instrument slumbered unrealized possibilities surpassing the capabilities of the greatest artists, and that in a more satisfactory manner than anything attainable by the human being.

The Player's Achievements

Today, the professional and preoccupied man of business, his family, friends and neighbors, may approach this modern miracle, the player, and draw from its hidden sources the sweetest harmonies ever conceived by mortal man, without musical knowledge or the essential skill to perform on the piano; and, by means of the player alone, they can reproduce with unerring accuracy and refined taste the marvelous works of the greatest masters, yes, and the themes of the various compositions, with unerring technic and ever-increasing appreciation. Such being the case, why should a human being devote a lifetime to the development of the technical capacities of the two hands in order to overcome the deficiencies and limitations of the conventional piano?

Marvel not, therefore, when in disgust, Leschetizky should arise from the conventional piano and exclaim, "In two hundred years from now there will be no such thing as playing the piano by hand." Leschetizky was not only a great musician, but a great prophet, and his prediction has already in large part become true, thanks to John McTammany. The player has put an end to the exhaustion of the human fingers by the technical manipulation of the piano keyboard, and thus, by means of the player, the standard of musical perfection was elevated from a low to a higher plane.

It is over two hundred years since Cristofori made his improvement upon the harpsichord, and hundreds of men have spent their lives and fortunes in its further development since; but the piano is still imperfect and susceptible of further improvement. While the principle and construction of the interior player was settled upon by John McTammany as early as 1876, yet the improvement and refinement of both can and will go on. So it follows that by far the greatest step ever taken in the musical industries of the world was taken when John McTammany, nearly fifty years ago, embarked upon the task of inventing the player.

Few Saw the New Luminary

Few there were within the industry at that time who foresaw the part the player was destined to play in the development of the musical side of society. To be an inventor was the zenith of John McTammany's ambition, the aim and end of his existence, and to this end he was prepared to suffer hunger, cold and abuse. He combined artistic and inventive ability in an uncommon manner, and it was by reason of this fact that he was enabled to grapple successfully with the dual proposition, music and mechanism.

In embarking in the player project, John McTammany adopted a high ideal and sacrificed wealth and health to attain it. Furthermore, he had the will power and determination to compel success, and that in spite of the jibes and jeers of his contemporaries and the conservatism of the times.

It is nearly forty years since John McTammany publicly exhibited his first player. In the wake of that instrument the musical world has followed ever since, and the modern player owes its existence to that modest effort of 1876. That model was the forerunner of the player industry of today, just as the pianoforte of Cristofori, over 200 years ago, was the forerunner of the manual piano.

The piano of 1876 was looked upon as something akin to sacred, a sort of an artistic fetish, as it were, and like the children of Israel with their golden calf, the piano manufacturers of that time were prepared to fall upon their knees and worship

the pianoforte. The idea that any one should think of introducing within its sanctified walls a player mechanism seemed to them as little short of sacrilegious.

McTammany No Respecter of Fetishes

With John McTammany there was nothing too sacred for investigation, nothing so perfect but it could be improved upon; he was not a slave to conformity; he did not hesitate to examine the claims made in behalf of the piano—in fact, he refused to conform to the usages and traditions of the times and declined to regard the piano as a holy thing or its manufacturers as infallible. He had a mind of his own; he had weighed the piano in the balance and found it wanting.

John McTammany's work and worth have been recognized and his title to the invention of the player mechanism is no longer in dispute. Those who had previously consigned him and his invention to oblivion refuse to limit their interest in him now to a mere description of his mechanical achievements and insist upon an outline, at least, of his life and personality.

That "some men are born great, others have achieved greatness, and some have had greatness thrust upon them" is a commonplace that has often been verified, but whatever else may be said about the subject of this sketch, one thing is certain, he was not born great, and instead of having greatness thrust upon him he has had to fight for the honors justly due him. Without education, without health, handicapped by injuries received during the Civil War, without a pedigree worth mentioning, minus friends, money or influence, yet, despite all the foregoing drawbacks and others too numerous to mention, John McTammany boldly and defiantly faced the world with the firm determination of making his mark. To succeed in the development of the player, John McTammany dedicated his whole physical being, mind, body and soul, and wrecked his health on the altar of his ambition. Nights and days and Sundays he applied himself to the task, while every dollar he could command went into the enterprise, such was his faith and enthusiasm on the subject.

Born in Glasgow, Scotland

John McTammany is a plebeian. He was born in the city of Glasgow, Scotland, seventy years ago, of poor but honest parents. There was no ringing of bells, blaring of trumpets or firing of cannon to announce the auspicious event, so he says. His education was limited, and what he did get was obtained mostly in the heartless school of experience, by and through which, according to George Whigelt, President of the Inventors' League, "he developed into one of the greatest inventors of the age."

If a man's popularity were always measured by the extent and value of his services to mankind, John McTammany's name, instead of being comparatively unknown throughout the world, would be a household word, as much so as that of Bell, Edison or Marconi.

John McTammany, by birth a Scotchman, possesses the thrift and economy of his race. He cares little for money, spending nothing on expensive pleasures, leads the simple life, dresses plainly, does not smoke, drink or gamble. Patriotism and devotion to the interests of mankind have been the secret of his success and the compelling force of his life.

It is a lamentable fact that the world has always been ungrateful to those who have been its truest benefactors, but at heart the American people worship achievement and the handiwork of her men of genius. What greater ambition could a man have than to create a new and useful thing or to establish a great and beneficial industry?

McTammany's Versatility

John McTammany's genius is many-sided, as evidenced not only by the number and character of his patents, but also by the various movements and occupations in which he has distinguished himself from time to time as musician, inventor, soldier, reformer and publicist, a man of varied gifts, by means of which he might readily have distinguished himself in other walks of life, had he elected so to do.

John McTammany was a prophet; he could anticipate the needs of the public and he diligently set to work to provide for them. No man has ever exerted so great an influence on the music trades.

The time was approaching when the public would demand the player, and its possibility had even been predicted. The limitations and imperfections of the manual piano had become manifest not only to such famous teachers and musicians as Leschetizky and others of equal standing, and even the layman was becoming conscious of these deficiencies.

It would not have mattered if John McTammany had never been born; some one was bound to present the player to the world. Neither ignorance,

prejudice nor malice could have barred the player's advent much longer.

The great credit due John McTammany does not consist so much in the fact that he invented the player, but that, by his indomitable will and persistence, he forced the instrument upon the American market at least twenty-five years earlier than it otherwise would have appeared, and compelled its recognition and adoption in the United States twenty years before Europe awakened to value the desirability of an instrument operated by means of a perforated roll.

What the Past Ten Years Have Brought

It is only within the past ten years that self-playing instruments have become so popular that they have created a wide market for their manufacturers, opening up new territory for their sale and exploitation and thereby enlarging our industry and increasing our commerce. The piano stands silent no longer. The player is in universal use. It has opened up an avenue of vast social enjoyment. Its influence and results are so far-reaching and comprehensive as to be almost beyond human comprehension.

Notwithstanding its present development and all that has already been done, the industry is still in its infancy. Cristofori invented the pianoforte over two hundred years ago, but the pianoforte of Cristofori is still being improved. So it will be with the player; additional improvements will be made long after John McTammany shall have laid down the white man's burden.

In estimating the advantages which have accrued to the world as a result of John McTammany's labors in the musical industries alone, to say nothing of his contributions to other arts, imagine, if you can, what would be the condition of the piano trade without it, and what would happen to the manufacturers of perforated rolls. When we come to understand that every player is an educator and that about a hundred thousand educators are now sent out annually in America alone to exert their educational and uplifting influence upon the masses, then and then only, can we begin to appreciate the true value of the player.

Conceive, if you can, the thought that Gutenberg had never been born, or that modern printing was to become a lost art.

The Miracle of the Player

Prior to the advent of the player, musical notation was Greek to the masses, but today, transferred to the music roll, it becomes not only intelligible, but appreciable. Yesterday the works of the great masters lay upon the shelves of the music publishers unsold and unsalable; today those self-same works, with their matchless melodies, may be heard floating from the cottages of millions of human beings made happy by the music of the masters. Thus it will be seen that the player is not only great in its physical aspect, but also in its intellectual advantages. It is great whether viewed as a commercial or as an educational proposition, and, as the industrial slave has been made free by labor-saving contrivances, so the handicapped artist, as well as the ordinary layman, is relieved of the technical drudgery of learning to perform by means of the manual keyboard.

The book may be prejudiced, as all such books are claimed to be, but it is not untrue, as every allegation set forth is fortified by documentary evidence. Furthermore, it is free from malice or intentional misrepresentation and, taken in connection with McTammany's History of the Player, abounds in authentic facts and indisputable statistics. Thus we have a couple of volumes contributed to piano history that are at once biographical, documentary, anecdotal and statistical. With their appendixes and indexes, they should take their place on every student's shelf as valuable works of reference.

The book deserves to be generally read, particularly by musical people and especially those in the trade, not so much on account of the phenomenal growth of the industry, nor yet because of its American origin, but because of the fact that the player enters into the very warp and woof of American life. It is impossible to do justice to this subject in a single article or within the conventional limits of a preface.

A Boon to the Trade

The fact, however, that John McTammany has rounded out his life-work with these two books is a subject for congratulation to the entire piano and player industries. It lays before those who have not the opportunities, the time, nor the wherewithal, perhaps, to secure this information, that which John McTammany has carried around in his head. It forms a remarkable exhibit of the intellectual capacity of this remarkable man, for he has gathered these data and has so compiled them that the volume will serve as a reliable book of reference for many years to come. That it is honest goes with-

out saying, for never during his eventful life has John McTammany been capable of thinking or doing anything but that which was ethical, and he always had the Golden Rule in mind. For this, John McTammany has the respect of every individual member of the industries in which he has labored so conscientiously during his life, and that in itself is recompense equal to the glory of having invented the player.

It is a wonderful thing that John McTammany should have lived to see the day when his invention was utilized on the concert platforms in America and Europe, not only in the demonstrations of piano music, but as an accompaniment to the voice, and to know that the player which he invented has been utilized in the great orchestras of Europe as one of the principal instruments, taking the place of the piano played manually.

That, indeed, is glory enough for the span of one man's life, and this book, which shows the inception and progress of this wonderful instrument, from the little reed organ first exhibited in St. Louis to the magnificent grand player-pianos of today, all within the compass of one man's life, presents a wonderful indication of what is rendered possible through the brain of man.

THE PLAYER PIANO

Its Technical Evolution, Being a Presentation of the Patents Issued in America and Europe Since Its Inception

By John McTammany

HAVING just completed one work that is now in press and which is entitled "The History of the Player, By Its Inventor, John McTammany," which sets forth more particularly my own relation to the player, but nevertheless was not intended as a technical presentation of the subject, I now propose to take up the whole problem of the origin, history and development of the player mechanism, with the determination of examining into the claims of every patent, foreign or domestic, that has been issued up to date, and that in any way relates to the evolution of the player mechanism. And in doing so I am not unconscious of the magnitude and the difficulties involved in the task I have undertaken, but the reader can be assured of one thing, that no man ever embarked in a more pleasurable enterprise or looked forward with greater delight than I do to this labor of love. I have but one prayer to offer in this connection, and that is that my life may be prolonged to see its completion.

There is something about men and inventions that, notwithstanding my researches, my years and experience, I have never yet been able to understand, and that is the perversity of men in trying to rob inventors, not only of the emoluments that pertain to their inventions, but the honor of these inventions as well. Shakespeare has truly said:

Who steals my purse steals trash; 'tis something, nothing;
'Twas mine, 'tis his, and has been slave to thousands;
But he that filches from me my good name
Robs me of that which not enriches him and makes me poor indeed.

In studying the subject of inventions and inventors during a period of fifty years, including the steam engine, the steamboat, the locomotive and most of the other great inventions, both ancient and modern, I do not know of a single instance where the inventor's title to his invention has not been challenged, and an attempt made to rob him of the honor due him. The player mechanism has been no exception to the general rule, as evidenced by the following article which appeared in the Chicago Post of September 15, 1911, and which reads as follows:

"The first successful attempt to play an instrument with a keyboard by a mechanical device was made in 1731 by Justinian Morse in England. Voucanson, an automaton maker in Paris, improved on this in 1740, and Jacquard, of silk loom fame, in 1802 added his endless belt of perforated cardboard, which are in principle identical with the perforated music rolls." (See Appendix.)

In replying to the foregoing, allow me to state that during all the years of a pretty lengthy existence during which I have been a diligent student in music and musical mechanism, I have never yet seen or known of such monumental misrepresentation as there is wrapped up in the foregoing brief, untruthful and misleading statement. And that a man should have felt inspired to write such a libel on America and an American inventor after reading "Pianos and Their Makers" simply betrays the unreliability of that book and the unpardonable presumption of its author in attempting to discuss a subject which he knew little or nothing about, and who wilfully persisted in his course after being warned of the consequences by those competent in every way to deal with the subject.

The law and the rules of practice in the United States patent office, and which are now substantially the same in most of the countries of Europe, demanded at one time that not only a detailed drawing and specification be filed with the application, but a model also, the latter provision having been repealed owing to the absence of room for their preservation in the present United States patent office. But a return to the former custom of submitting models is now being agitated as a necessity for a full

understanding of the subject matter of the application, and under existing law the examiner is authorized to demand that the applicant submit a model in the event that the specification and drawing do not clearly and in detail define and set forth the invention claimed. Under the patent law a specification and drawings must be so clear, comprehensive and easily understood that an ordinary skilled mechanic in that line of manufacture could take the drawing and specification and reproduce the invention. If in reconstructing the invention it was found that the drawings or specifications were defective, then the inventor would have been guilty of laches and without remedy in law in the event of infringement. So it would remain until he had reissued his patent and further elucidated his specifications, drawings and claims.

No mere skilled mechanic could take up the Morse specification, so called, and produce a working instrument from it without resorting to invention, which means creating, and if he had to create it, then Morse could not have invented it. Therefore, the last man and not the first is the inventor.

In view of the foregoing, I have never attached any more value to Morse's specification than I have to Jules Verne's "Submarine," though in his book entitled "Twenty Thousand Leagues Under the Sea" he clearly anticipated the real and subsequent inventor, J. H. Holland. So the most that can be said on the subject is that the minds of men were in the milky way, regarding the player as early as 1731 as indicated by the specification of Morse referred to. In other words, men had began to dream about the player, but not until 1876 did the player make its advent into the world. Therefore, I claim, and the records do abundantly prove, that the player-piano is an invention of the nineteenth century and its inventor an American, and I challenge any man to show to the contrary. This is a sweeping statement, I will admit, and to some it may smack a little of being a pretty broad claim. But when we consider the fact that the Americans were ten years ahead of Europe in the introduction of the player mechanism and then take up a great daily paper like the Chicago Post and read such an unwarranted statement as the paragraph referred to, it is time that the responsible author of such wholesale misrepresentation should be brought to book, and the responsible author in this case is none other than the author of "Pianos and Their Makers." Now, with regard to the facts, they are simply as follows:

Certain men in Europe and America, by name Morse, Bain, Pape, Dawson and Seytre in Europe, and Hunt & Braddish & Van Dusen of America, dating back as far as 1731 and extending to 1847, seemed to have had some vague, indefinite and hazy idea of a mechanical musical instrument to be actuated by a perforated device consisting of wood or other substance, instead of by pin cylinder, the method in universal use, at that time, for the operation of barrel organs, and music boxes which doubtless inspired the suggestion of the perforated sheet. Up to 1863 no European or American had succeeded in producing a practical working instrument of any kind for the mechanical operation of keyboard instruments by means of a perforated device, but in the year 1863 there was issued to one Fourneaux, of Paris, a patent on an instrument which may be regarded as the first successful attempt to construct a mechanical musical keyboard attachment employing a perforated device to govern its action. It was several years later before the thing was sufficiently developed to place it upon the market. Even this affair bore no resemblance or relation to the modern player, as that instrument is known and as the term is understood at the present time. It was simply and solely a three octave cabinet attachment to be applied to the keyboard, a system now regarded as obsolete, not only in America, but also in Europe, they having adopted the American plans and designs, thereby recognizing the Americans as the inventors of the player mechanism. In fact, there is no evidence in existence prior to the advent of Fourneaux's experiments except a few sketches and worthless patents like Morse's to indicate that anyone had ever conceived, constructed or invented anything practical or even impractical, for that matter, in the player line. So far as Morse is concerned, there is absolutely no evidence whatever to indicate that he ever constructed or even conceived the player or anything resembling it. On the contrary, there is abundance of evidence contained within the limits of his own specifications to condemn the proposition and to show that he did not and could not have made the thing therein suggested, for it was not only a mechanical but a physical impossibility. Even if it had not been that, it would have been a mechanical monstrosity, and that was even worse. There are no plates, models, or drawings accompanying the so-called Morse specification to indicate how the miracle was to be performed, and the writer of "Pianos and Their Makers" ought to have been able to have detected that fact, without my directing his attention to it, which I did when I first went over the manuscript of the player section of that book, prior to its publication. Having pointed out that fact to that writer and he having refused to make the proper correction, I now propose to show up the absurdity of Morse's claim. Now, in order to show the rank absurdity of this Morse's specification, I propose to take it up, paragraph by paragraph, and show that the whole thing was a fake, a fraud, a fancy and a mere figment of the brain. Take, for instance, the following:

"Music being pricked on both sides of leaves of half-inch wainscot, eight or ten Psalm tunes being contained on a board about the size of a large sheet of paper."

A large sheet of paper is rather a vague and indefinite statement to say the least, but let it pass.

Turning to Webster's dictionary we find the following definition of wainscot:

"A clapboard, a narrow board thicker at one end than the other; weather boarding for a house."

And we are further advised that "eight or ten Psalm tunes being contained on a board about the size of a large sheet of paper." Not only can eight or ten Psalm tunes be placed upon a single board, but in addition thereto the preludes and interludes also. Furthermore we are informed by Mr. Morse that it "will be very proper to be made use of in churches." Now if that means anything at all it implies that it was a practical substitute for an organist. Now, mark you, the writer has been an organist in many churches covering a period of several years and it is therefore only reasonable to presume that I know what I am talking about and had the author of "Pianos

and Their Makers" been equally well equipped for his task he never would have got into the mess in which he now finds himself as the result of the player section of his book. So I repeat that it would have been necessary to duplicate a Psalm tune at least three times with the preludes and interludes, which would take up nearly as much space as the tunes with its repetitions, and having had the experience in laying out music on wood and metal and other substances, and having known others who had similar experience, I am in a position to say that the most condensed tune that I ever knew to be perforated into a board was "Dennis," a short meter hymn that covered two longitudinal feet, and to have repeated it would have taken at least six feet, and with the preludes and interludes would have required at least four additional feet, making a total of ten feet. This, we are informed by the inventor, and supported by his historian, could be "repeated ten times," which would require a board one hundred feet long. Now it stands to reason that the scale could not have been nine to the inch, which is our present player standard, or even six to the inch, as under the former system. So we will suppose that it was four to the inch and assuming that it was a four octave organ. That would be forty-eight quarters of an inch or one foot wide. Furthermore the wainscot was to be half an inch thick. Now imagine a board half an inch thick, one foot wide, and one hundred feet long—a pretty fragile device, I am thinking. But that is not the end of the absurdity. We are informed furthermore, that this board was pricked on both sides. Then if that was so, one row of perforations could not have been directly opposite the other, as I had previously supposed. So the board must have been at least two feet wide instead of one, as I had previously supposed. Thus we have a board 100 feet long, two feet wide and half an inch thick. This board must have been veneered. Otherwise how could it have withstood the strain of its own weight? Not only must it have been veneered, but it must have been reinforced by at least a six inch plank on either side to keep it from falling to pieces by reason of its own weight while going through the machine; nor does this grotesque proposition end even there.

We are informed that this organ had more than one set of keys. In other words, it was a double banker. Then it must have had stops, but as it was "very proper to be made use of instead of an organist," according to the specification, then the question is, How or who managed the stops and how was this pricked board to govern two keyboards? Did the pricks on one side actuate one keyboard and the pricks on the opposite side actuate the other? And how many pricks to the square inch did this wonderful board have, anyhow? But the half has not been told, for in addition to its other transcendant and marvelous and unexcelled qualifications the bellows of the so-called player would "go either by hand or feet." That beats the modern player. You cannot play the bellows of the present player by hand, so instead of improving on the past we are evidently retrograding. In fact, the present generation "ain't" in it with ye ancients, not for a single moment, as witness the following:

"Any person, though unskilled in music, may be taught in an hour's time to play with great exactness and with the proper graces either single or double with preludes and interludes all Psalm tunes, fugues, voluntaries and anthems that are usually sung in churches, or any other music, though never so difficult, or what length of compass soever."

O, ye gods and little fishes! And to think that a man making the pretentions that the writer of "Pianos and Their Makers" does, allowing himself to be deluded and misled by such nonsense. The idea of this man Morse or any other man taking a country clodhopper and within the limited space of one hour converting him into a veritable Paderewski so that he could play "anthems" or any other music "though never so difficult, or what length or compass soever," and that the musical critic of a great daily paper like the Chicago Post could have passed upon this subject without detecting and exposing its inconsistency and absurdity, is not calculated to inspire one with confidence and respect, in the average intelligence of the musical critic of the modern daily. In addition to the foregoing miraculous merits of this wonder-making machine, "with either diapason or principal," and double banker at that, it is also unlimited in its range or capacity of keyboard, as witness the following:

"To play music though never so difficult or what length or compass soever." In other words, it must have had a keyboard with a range or nineteen and a quarter octaves more or less, a sort of an elastic adjustable keyboard as it were. So again we are not in it with ye ancients. But to cap the climax of this comedy of errors this marvelous instrument had "graces." Just think of that, will you? Again we turn to Webster and find the following definition, which means "ornamental notes or short passages either introduced by the performer or indicated by the composer, in which case the notation signs are called grace notes, and grace means elegance, perfection of form, loveliness, inherent excellence, pleasure and benefit."

But that writer is persistent, and if he was only persistent in the right, what a player section we would have had. But unfortunately his persistence is in the opposite direction. There is nothing in this article that I did not point out to him before he went to press. Furthermore, I predicted just what has come to pass, as a result of his misleading the public. I told him, at the time, if he persisted in publishing the Morse specification, giving it the dignity and character of the modern player, without exposing its absurdity, I would attack him and Morse in the press and the writer of "Pianos and Their Makers" can bear me witness that I have been as good as my word. He gave me to understand that he was something of a "pen pusher" himself and that I might expect to hear from him in reply. My criticism of his book is over a year old, and while the columns of the music press were open to him or anyone else desiring to make reply, no one has yet had the temerity to meet the challenge therein laid down. Nobody will for the simple reason that nobody can refute my claims. Even had he been content to simply publish the Morse specification for what it was worth, I should have been satisfied and would have refrained from attacking him, for in many respects I admire him. But as if to provoke this very assault he went further which only shows that "fools rush in where angels fear to tread," and that writer actually be-

comes a sponsor, defender and upholder of the Morse claims as witness the following:

"Apparently the first successful attempt to play an instrument with a keyboard by a mechanical device was made in 1731 by Justinian Morse of England."

I challenge anyone to show that the Morse device was successful, or even possible, or that it could have been successful in accordance with the specification.

That writer laments the fact and seems to feel pretty badly because there is not a Morse player, so miscalled, in existence, as evidenced from his book, Page 133, Line 5, which reads as follows:

"It is to be regretted that no instrument answering the above description seems to be in existence." No, and it never did exist and never could exist not even in the fanciful brain of even a Morse.

The impossibility does not exist, the drawings do not exist, the claims do not exist, the plates that should accompany it do not exist, the model itself did not exist, nor do I see any reason why their non-existence should be a matter of regret. I do not know what we would want with it or them. It could not have been practicable, if possible to have constructed it, in accordance with the provisions of the specifications. Nor would it have been salable even if it were possible, and nobody would want to buy a mechanical freak. Finally the writer of "Pianos and Their Makers" winds up as follows:

"But considering the patent laws of those days it can hardly be doubted but that Morse constructed at least a working model, according to his specifications."

What does this writer know about the patent laws of those days? Practically nothing, because if he did he would know that they were exceedingly lax and that the titles and even the numbers in some instances of the early patents are forgotten and that no plates, drawings, or even sketch accompanied the Morse application, whereby to verify the claims of the inventor. Even in our own country with its elaborate patent system, a system which has been largely copied by the nations of Europe, the patent issued to Whitney, inventor of the cotton gin, which revolutionized the cotton industry of the South, one of the most important patents issued by our government, during its whole existence, is not even numbered in the million patents issued by the United States government. And mark you, Whitney's patent was not issued in the Seventeenth Century either.

The writer of "Pianos and Their Makers" refers to Jacquard and Vaucanson, the former a French inventor, of Lyons, to show that he was engaged in the development of some kind of a musical instrument. But certainly there is nothing in the published account of Vaucanson, that other Frenchman, to indicate that he ever saw or even heard of a pianoforte, although the piano was invented in 1707. Yet it was not until 1776, the year of American independence, that Sebastian Erard, of Paris, took up the work of developing and manufacturing pianos, just six years before the death of Vaucanson. It is a peculiar coincidence that Christofori should have died in the same year Morse applied for his patent; that is, in 1731. The date of Vaucanson's birth is not given, only the date of death which was 1782, fifty-one years after Morse applied for his patent, while Jacquard died in 1801, seventy years after Morse took out his patent. Thus neither Vaucanson nor Jacquard has any place in any history of the player piano, nor have they any moral right to divide the honors with Morse or anyone else for that matter for the suggestion of the perforated board. On the contrary, Vaucanson and Jacquard were antedated by Morse as far as the perforated device for governing the operation of mechanism was concerned, and were, therefore, indebted to Morse for the idea of the perforated device which was subsequently applied by Jacquard to looms. It is doubtful if either Vaucanson or Jacquard ever heard of Morse or his impossible player, so miscalled by the modern historian referred to.

In this connection I put the following question to the readers of the MUSICAL COURIER EXTRA: Is or is not the player an American invention? If not, does the Morse specification herein set forth and in the absence of plates, model or drawings and all other evidence that should be on file upon the subject, prove that he is the father or inventor of the modern player mechanism as the term is now understood? If he is please state your reasons why you think so; if not, give your reasons for your negative opinion. These questions are especially referred to player experts, inventors and manufacturers of the player for the purpose of settling finally and conclusively the real status of Morse in this controversy which I will admit entitles him to the credit of being the first to suggest a perforated device for the control of the action of a musical instrument.

It having been asserted that there were patent drawings accompanying the Justinian Morse patent, my statement to the contrary notwithstanding, I have taken the pains to obtain the following, which should, in my opinion, settle the controversy:

New York, August 27, 1913.

There is no drawing accompanying the patent of Justinian Morse, of 13 April, 1731.

WILLIAM KUSS,
In Charge Patent Department,
New York Public Library.

THE FRENCH PATENT OF SEYTRE DATED 1842

SO it came to pass that in 1731 Justinian Morse of England had a dream, a vision of a mechanical musical instrument, that he reduced his fancy to writing, called it a patent specification and filed it in the patent archives of Great Britain, where, like thousands of others equally as important, it was promptly forgotten, and so it remained until the author of "Pianos and their Makers" found a mare's nest one hundred and eighty years afterwards in the year of our Lord A. D. 1911, when the author of "Pianos and their Makers" dragged forth the Morse specification, branded it as a player, and challenged the writer to prove to the contrary. The challenge was promptly accepted and I think the author of "Pianos and their Makers" got all the proof he wanted and more.

Nothing more was attempted in the mechanical musical instrument line operated by a perforated device until the year 1842 when a Frenchman named Seytre also had a

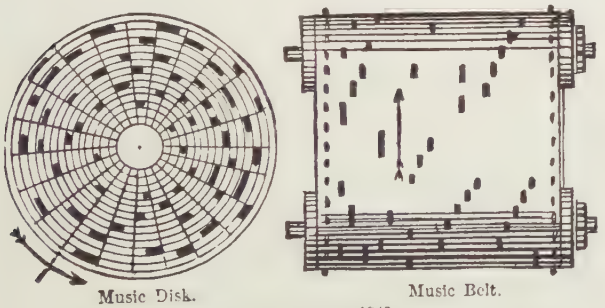

Music Disk. Music Belt.

SEYTRE SYSTEM, 1842.

dream, somewhat similar to that of Morse, and he, too, filed an application for a patent; but it was nearly as vague in description as was the Morse specification, differing only in having two illustrations of a music sheet, one representing a disk, the other in the form of an endless belt, neither of which arrangements were ever embodied in a player. From inquiries and researches made on the ground by the writer nothing further bearing upon the subject could be ascertained. As I said in Chapter 1, the suggestion of a perforated device for governing the mechanism of a mechanical musical instrument belonged to Morse, of England. When I visited the Patent Office of France in the 80's I was shown the original specification, but was advised that there was no drawing accompanying the case. Subsequently I received a printer's proof of an article prepared for publication in an encycloperia in this country which purported to be a history of the player, but as such I found it false and misleading and notified the publisher that "it reminded me of the play of 'Hamlet' with Hamlet left out."

The article was then rewritten and I was given the credit due me, but I was also given to understand that I was expected to pay for it, which I promptly refused to do. Whereupon my name was excluded from the article and instead the names of others were substituted. Thus, I came to learn the truthfulness of the allegation "that history is a lie agreed upon."

So I find myself confronted with the two sketches or drawings of the music sheet already referred to, but whether they are genuine or counterfeit I am unable to determine. Suffice it to say that upon visiting the Patent Department of the New York Public Library in company with three members of the staff of the MUSICAL COURIER EXTRA we were informed that no drawings accompanied the Seytre specification. I prefer, however, to give Seytre the benefit of the doubt, hence, the introduction of the illustrations of the music sheet referred to; but neither in the form of a disk or that of an endless belt stretched between a pair of rolls were these ideas ever embodied in a player. Consequently no credit can be allotted to Seytre, except that he was the first to suggest and illustrate a flexible perforated music sheet in connection with a mechanical musical instrument instead of the inflexible board or "wainscot" referred to by Justinian Morse.

From the foregoing it will be seen that the dream of Morse became an idea with the Frenchman, something more tangible and intelligent. Still ideas are not patentable, only inventions. Nothing that appears in the Seytre specification or drawings can be dignified by such a title. Either we must dig up something more in connection with the Seytre application, or wait till others with more advanced and practical ideas have put in an appearance in order to give an intelligent verdict on the question of player priority.

Justinian Morse, of England, suggested a rigid perforated device. Seytre suggested a flexible sheet instead in the form of a belt. It took one hundred and eleven years to travel that far in the player development.

In D. Appleton & Co.'s annual encyclopedia for 1885, new serial Volume Ten, will be found the following:

"In 1842, Seytre, of France, who is acknowledged to be the pioneer of preparing music on slotted paper."

D. Appleton & Co.'s statement does not harmonize with the conclusions of the author of "Pianos and Their Makers," in which it is stated as follows:

"Apparently, the first successful attempt to play an instrument with a keyboard with a mechanical device was made in 1731 by Justianian Morse, of England."

If the Morse attempt was successful as stated, then Seytre and all the others who succeeded him have no standing in this controversy and the origin, history and development of the player is all contained in the Morse specification consisting of 21 lines and 250 words. But I prefer to agree on this point with D. Appleton & Co., to the effect that Seytre was the first to show by drawing and otherwise and to intelligently describe the perforated sheet and to submit the practical process for the manufacture of the same, although in the forms shown it never was used in a practical working instrument. So Seytre like Morse, his predecessor, dropped the problem and it remained dormant until 1847, five years afterwards, when the subject was resurrected by Alexander Bain of Scotland in a somewhat different but more practical form.

SPECIFICATION OF CLAUDE FELIX SEYTRE, OF LYONS, FRANCE.

Translated From the French.
Patent No. 8,691.

Patent for an invention of five years, under date of January 24, 1842, to M. Seytre (Claude-Felix), at Lyons, concerning pianos and organs which, by means of a perforated card-

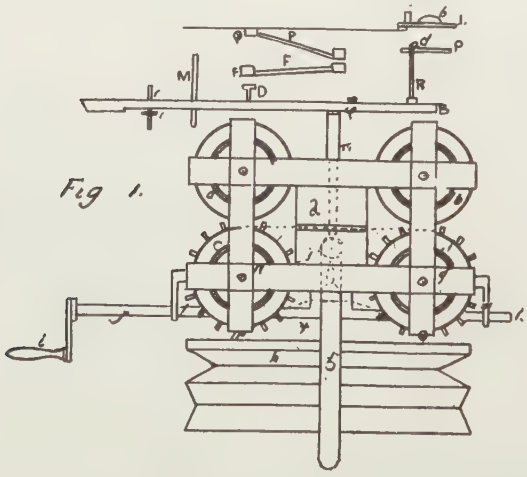

board, can play music. By the use of my mechanism a person not knowing how to play on the piano or organ, and not even recognizing music, can perform the most intricate compositions, regardless of their length; that is to say, from the shortest aria to an entire opera. My process applies equally to all keyboard or finger instruments. I have given it the title "Autopanphones," composed of three Greek words—autos (itself), pan (all), and phone (voice or song); namely, a piano or organ which plays all kinds of pieces by itself.

In the interior of my piano I place the music board of the organ, harmonica or accordion, which play in all keys and which accompany the piano or play solos, one after the other, without changing the cardboard tape, on which I have inscribed the piece of music to be played. In the first place, considering pianos (Fig. 1), I apply my mechanism as well to old pianos as on those built expressly for it; I do not derange the system already employed.

AB, one of the levers, is a bar made of well dried wood in order that it shall not warp; it is better to make it of spruce, which is strong and light. The part A is visible on the keyboard; it is covered with a strip of ivory or of ebony.

C is a slot through which a spindle passes.

The piece AB is movable, oscillating around the fulcrum, C, which is covered on its under side with a strip of cloth, to avoid the noise which the striking of the wood would produce.

A stop, O, placed under the key, prevents it descending further; the lever remains inclined while under the pressure of the finger applied at A, but it resumes the horizontal position just as soon as the finger leaves it, because the part, CB, is much longer and heavier than AC, and because the weight of B is greater. This lever is 38 or 40 centimeters long.

All the supports C are placed in a straight longitudinal line; however, the keys of the semi-tones are less advanced on the keyboard, the support C is set back a little for the levers of the sharps and flats, in such a manner that all these pieces are equal in length and in pattern.

When the key A is pressed down, the part CB of the lever rises; an angle block carried at the end of a small brass rod, D, fixed perpendicularly, also rises, and strikes the piece E, whose axis of rotation is at end, and which itself carries a vertical rod and block F. This block, accordingly, also rises because of the lever and strikes the piece of wood P right near its extremity.

This piece carries at R a wooden pad covered with buffalo skin. It is the hammer which strikes at one time two or three of the strings above it, because the arm P and the end N of the piece EN are fastened to the pieces of leather, 1, 1, attached to the solid board QN.

These boards are of square rods, longitudinally placed; their duty is to carry the leather strips of these hammers arranged parallel, each one directly above the lever which is to strike it.

Thus it is plain that when the key is pressed the impulse is conveyed to the hammer, which springs up to the string and strikes it from beneath.

The parts of the apparatus are so arranged that each piece strikes the next one perpendicularly to its direction; it is necessary to say that the piece EN, and especially the hammer QR being held only by tongs 1, 1, attached, hang by their weight.

A vertical brass rod, M, fastened to the bottom of the casing and passing through a hole made in the lever, holds and guides it in its movement. The remote end of the lever, B, is attached to and lifts another vertical rod of wood, K, which passes easily through a hole in the plank P, where it is supported by a button.

This rod, thrust upwards, lifts with it the piece HL, moving about L and carrying at H a small piece of cloth; this piece carries a hinge at L and when the key is struck it rises and allows the string to vibrate; but as soon as the key returns to horizontal position, HL is immediately brought back, and the rod K falls down, because HL is pressed by a weak spring, B, formed by a simple wire of brass.

I have explained the action of these levers at some length, but it has been necessary in order that I be understood in what follows.

For my invention I use an endless cardboard, RRR, Fig. 1, somewhat like a Jacquard loom, except that it is one piece, without joints or seams like a mantle; the holes in it are made square or long, according to the length of the note to be played; the hole is as much larger as the note is longer, and vice versa. It is divided transversely in as many equal parts as there are measures in the piece to be played, so that there shall be no interruption at the end or at the beginning. Also there are at equal intervals circular holes on the borders, in which enters the pegs, placed on the lower wheels which serve to impel it.

When I wish to play a piece by means of my apparatus, supposing that it is perforated properly for the music which I wish to hear, I introduce my endless cardboard tape between the four wheels, A, B, C, D, as it is marked, R, R, R, R, Fig. 1. I introduce it at the left end between the two upper wheels and the two lower ones.

The two upper wheels, like the upper cross piece which supports the piston, are held by a sliding support, which has up and down movement.

The endless tape is introduced between the two upper wheels, AB, and the two lower wheels, C, D, and between the two bellows, G, H, Fig. 1 and Fig. 2, I lower the above mentioned support and I start going my mechanism by the handle I. This causes the shaft JK to turn, which rotates in the bearings at L and M.

At N and at O there are three endless spiral threads which engage with the thirty-two toothed gear wheels, which are fixed fast to the wheels C, D.

These wheels have pegs all around their circumference on the two ends, space about three centimeters apart. These pegs enter the holes made on the cardboard at R, S.

Consequently, the two wheels C, D, carry along in their turning the tape and the two upper wheels, A, B, because they have holes in which the respective pegs of the lower wheels enter, and in consequence of the movement of the handle the four wheels, A, B, C, D, and the endless tape, R, R, R, R, are placed in action.

Fig 2

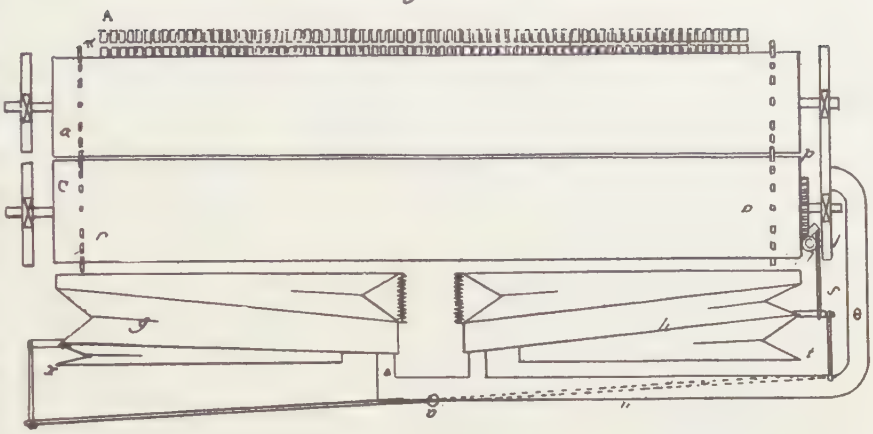

Fig. 3

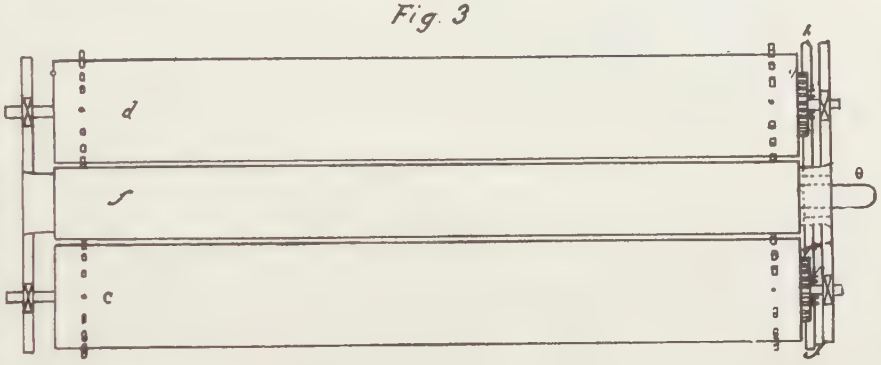

The shaft JK carries at its middle between the two lower wheels a crank which is attached, Fig. 2, to the pump S of the right hand bellows H.

At the end of the shaft is fixed a rod, T, which transmits the motion to the rocking piece, U, which has its axis of rotation at V, where it turns about a pivot and imparts to the rod X, which is attached to the pump of the left hand bellows Q, such a motion that in turning the handle I at a constant pace. the bellows are placed in motion and one descends while the other rises, thus giving wind continually.

The air is conducted into the pipes ΔΔ and comes together in the main pipe Θ, which itself enters at the middle of the cross piece F, Figs. 1 and 2.

This cross piece A has lengthwise inside of it a circular aperture about three centimeters in diameter and which serves as a reservoir of air.

The upper surface is pierced with small square openings about five millimeters, which lead inside into the air reservoir, so that the mechanism, having been placed in motion, whenever the openings made on the tape comes into coincidence with the opening of the cross piece which contains the reservoir, the air finding a passage, escapes by that exit with a rush. Above this cross piece F is placed a cross piece λ Figs. 1, 4 and 5, which is parallel to it. It likewise has square openings, 5 millimeters, which are in perfect coincidence with those of the lower cross piece F.

The aforementioned openings of the upper traverse λ go only half way up; from there to the top they are rounded; this cross bar is perforated from one end to the other.

In the upper part in the circular opening are driven hollow wooden tubes open at both ends, and which are set in by screwing and adjusting. They are equal in number to the keys of the piano, perpendicularly below each hammer, they are eight centimeters high.

Upon these tubes, Figs. 4 and 5, are placed pistons or other tubes likewise of wood, of diameter slightly larger and open at one end; they cover the first right up to the upper surface of the traverse λ and slide without friction.

These pistons are covered on their upper extremity by a little strip of buffalo hide to prevent the noise of the shock when it is rising, strikes the levers AB.

Here is the action of these pistons and of the complete mechanism.

On turning the handle I, the bellows and the wheels are placed in movement, consequently, the tape R, R, R, R, advances and passes between the two cross pieces F and λ which are covered with leather, the one on the bottom, the

Fig. 4. et 5

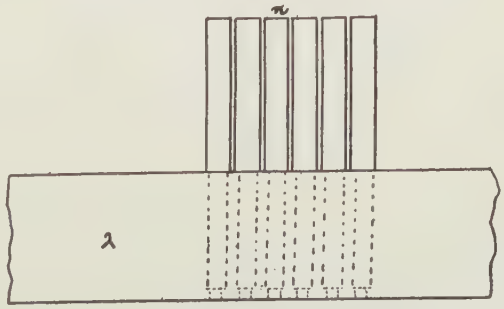

other on the top, so that the air cannot escape from above or below the tape, as there is between the two an interval just as large as the cardboard.

When the tape advances and a perforation for rendering a note comes to the cross piece, the air confined in the res-

ervoir of the cross piece F, not encountering any more check, passes into the wooden tube and presses against the piston which covers it, Figs. 1, 2, 4 and 5, because its upper end $\overline{\Pi}$ is stopped up, see Figs. 4 and 5, and when this piston is rising it strikes against the lever AB, which it hits at φ; this last, in rocking about the point C, strikes on its part the piece E, which also rises through the influence of the lever AB, and strikes the hammer P, which makes two or three strings vibrate, according to the construction of the piano.

Fig. 6.

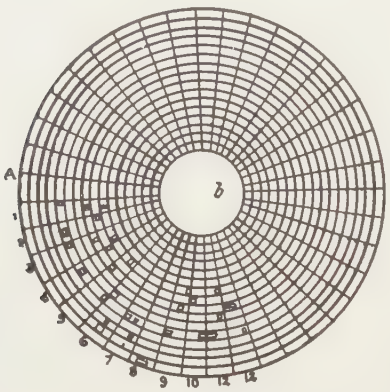

The levers A and B are also placed in action by the air which strikes the pistons $\overline{\Pi}$, according to the note inscribed on the tape.

For the organ the mechanism is the same; only the parts which are peculiar to the piano, such as sounding strings, levers, hammers, etc., are done away with; in the place of the pistons and holes of the upper traverse λ are introduced sounding pipes, and if the key is to be changed the cross piece λ; must be changed and another with other organ pipes tuned for the key to be played, is set in its place.

To play the accordion, the upper cross piece λ, which carries the pistons, is removed, and in its place is set a

Fig. 7.

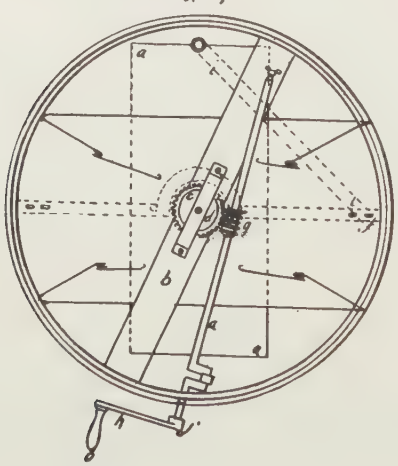

box on which the finger pieces of the accordion are arranged, these being arranged on a cross piece similar to the one to be removed.

To play the musical glasses the cross piece carrying the piston is replaced, and above it a box on which are arranged the strips of glass and the pistons $\overline{\Pi}$ strike from below and render the piece which has been read or inscribed on the cardboard.

These boxes must be changed to play in all keys.

To avoid all noise of the mechanism, the holes in which the pivots turn are swathed with strips of hide and the teeth of the wheels, P, Q, are of leather, the circular holes are drilled and the square holes are cut by a punch of one size.

Whenever one wishes to change a piece, one has only to change the cardboard and to introduce another according to the method I have explained at the beginning, and, if it be too long, it will fold itself in the space at ψ, Fig. 1, between the bellows and the lower cross piece of the air reservoir F; and if it is too short because of the small number of measures in the piece to be played, I double the piece.

I manufacture the cardboard tape myself in the same way as card makers.

For that, I use a drum which turns on two pins in two side places and I paste with paste made of starch an endless

Fig. 8

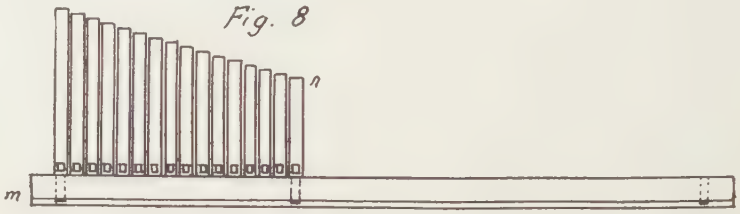

sheet of paper, always making it turn slowly until I have obtained a thickness of one half millimeter. I let it dry, after which I pass it through a set of rolls so as to make it of equal thickness and to polish it.

I piece all holes with a punch set on a stand in the nature of a smoothing press for the cardboard of the Jacquard loom, and with a single stroke of the press I pierce several measures of music.

Instead of using an endless tape, I also employ a cardboard disk, A, Fig. 6, to play pieces of forty measures or less, such as quadrilles, waltzes, short songs, etc.

It is less complete than the piano or organ; it has two octaves and two sharps, which are the Fa and the Sol.

For that I employ a circular drum, Fig. 7; in the bottom are placed the bellows A, A, A, parallel and above is placed the cross piece B, B, which carries the toothed wheel of 64 teeth C.

This wheel is turned by the shaft D, which has at E an endless thread, Q, which engages with the wheel.

It is in bearings at FF and at a point of pressure, G, so that there be no play in the shaft, and at H is a crank which sets the pumps of the bellows going.

The air is conducted by the pipes II into the reservoir JJ, which is two centimeters in diameter.

Square holes, five millimeters in diameter, are pierced into the reservoir, the upper part is covered with leather.

The toothed wheel carries a pivot K, Fig. 8. I set this pivot in the center of my card λ.

The cross piece, MM, which has on its under side square holes which coincide exactly with those of the cross piece containing the air chamber JJ, has also a strip of hide pierced likewise, which is pasted to it, so that the air is not lost.

The upper part of the cross piece on top is pierced with circular holes, which open into those square ones. In these circular holes are fixed sounding pipes, N, N, and the cross-piece, M, M, is supported on the cross piece J, J, by means of two bolts, seven centimeters by one centimeter in diameter, which serve to hold it fast.

To set my mechanism in motion I start the bellows pumps going and, since the shaft has a worm screw A, which engages the wheel C, this turns, and consequently the card turns also, and whenever the card has an opening which coincides with the square hole of the lower cross piece of their reservoir JJ, the air escapes and sounds the pipe above it.

Should I desire to play in another key I remove the cross piece MM, which I replace by another on which are arranged pipes in the key I wish.

To play the accordion I remove a cross piece MM, which I replace by another on which I have set the keys of the accordion, and I can likewise by changing the cross piece MM play in all keys.

If I desire to play the musical glasses I replace the cross piece MM by the small chest Y, on which are arranged the glasses R, R, R, and if I wish to change the key I replace the piece SS where it is pasted down by another, which shall be tuned in the key I want; above the card and below the small chest Y I place the cross piece VV, where the pistons I have already described are placed, and whenever an opening of the card, which has a circular movement in a horizontal plane, parallel to the bottom of the instrument, encounter a square hole, the air rushes out with force, lifts the piston XX, and these strike against the glasses RR of the harmonica.

For these flat and round cards I use cards made by card makers, and I pass them through the rolls before cutting them.

I also use for the endless tapes and discs calico on which I have passed several coats of starch paste mixed with a strong paste, and I then paste above and below a sheet of paper and I pass it through the rolls.

I also apply my endless tape, in which I have perforated the music to be played to church organs, and, in fact, for all instruments of a keyboard or touch.

It takes the place of the pinned cylinders in every way with the immense advantages from the economy of time and labor and by the ease of playing.

A piece of music of forty-five measures costs only one franc, fifty centimes.

The drawings in this case are not easily understood and not shown in sufficient details and enlargement to enable one skilled in the art to make an operative instrument without exercising the qualities of invention. And while the writer by reason of his experience, gained in 50 years of practice in the art could take specification and drawings and construct an automatic musical instrument that might produce a musical production that would be recognizable, yet I would be more dependent upon my knowledge of what had to be than by anything disclosed in the specification and drawings of Seytre. In an enumeration of the elements shown and described in said specification are the following:

First, a perforated music sheet.

Second, a pair of rolls.

Third, means for feeding the sheet, together with a bellows, an action and sound producing devices.

Thus we have six elements that are common to the player, three of which originated with Seytre, namely, the flexible sheet, the rolls and means of feeding the sheet, the bellows, action and tone producers, being old not only individually but collectively, having been embodied in other musical instruments. But Seytre was clearly the first to combine these elements in an instrument. But whether or not such instrument was actually built and how it worked we cannot determine in the absence of the contrivance itself. Suffice it to say that even if such an instrument as Seytre describes was possible, it was not practicable and, therefore, not salable. The trouble with such inventions as Seytre's, is that it does too much and he claims too much. Had he been content to have confined his efforts to one instrument alone he might by perseverance have succeeded in evolving something practical, but the idea of operating pianos, organs, accordeons, harmonicas and glasses, etc., by one mechanism considering the state of the art at that time was preposterous, so his work proved worthless and had to be abandoned.

Therefore in spite of the patent we must classify Seytre's contrivance as simply an idea and not very much of an idea at that, no part of it as shown, described or claimed ever having entered into the construction of the modern player.

Seytre's patent suggests two methods for the operation of an automatic musical instrument, first the direct system whereby the air passes directly through the sheet and into the reed or pipe, also a crude illustration of an intervening mechanism between the paper and the tone producing devices, neither of which are shown in practical form.

Consequently we proceed to the consideration of the next step in the evolutionary process, namely the patent of Alexander Bain of Scotland.

THE BAIN PATENT ISSUED IN 1847

THE patent of Bain of 1847 is next in order and between this plan and that of Seytre there is no comparison to be made or analogy to be drawn, except that they both illustrate the direct system. In one of the Seytre systems we have a sheet and tone producing device and an intervening mechanism between the paper and the sounding device, whereas in the Bain idea we have a sheet and tone producing device with nothing between, which greatly simplifies the mechanism. By means of a system of rolls and a perforated music sheet adopted to govern a series of apertures in a tracker or reed board, Bain succeeded in presenting in a crude and impractical manner, what subsequently became the very foundation of the American organette business of 1876, foreshadowing the great industry built upon the general principle first disclosed by Bain. The drawings and specifications of Bain's patent follows:

A. D. 1847.....No. 11,886

MUSICAL INSTRUMENTS.

BAIN'S SPECIFICATIONS.

TO ALL TO WHOM THESE PRESENTS SHALL COME, I, ALEXANDER BAIN, of the Wilderness, Hampton Wick, in the County of Middlesex, Gentleman, send greeting.

WHEREAS, Her present most Excellent Majesty Queen Victoria, by Her Royal Letters Patent under the Great Seal of the United Kingdom of Great Britain and Ireland, bearing date at Westminster, the Seventh day of October, one thousand eight hundred and forty-seven, in the eleventh year of Her reign, did, for Herself, Her heirs and successors, give and grant unto me, the said Alexander Bain, my exors, admors, and assigns, Her especial licence, full power, sole privilege and authority, that I, the said Alexander Bain, my exors, admors, and assigns, or such others as I, the said Alexander Bain, my exors, admors, or assigns, should at any time agree with, and no others, from time to time and at all times during the term of years therein expressed, should and lawfully might make, use, exercise, and vend, within England, Wales, and the Town of Berwick-upon-Tweed, by Invention of "Improvements in Musical Instruments, and in the Means of Playing on Musical Instruments"; in which said Letters Patent is contained a proviso that I, the said Alexander Bain, shall cause a particular description of the nature of my said invention, and in what manner the same is to be performed, by an instrument in writing under my hand and seal, to be enrolled in Her said Majesty's High Court of Chancery within six calendar months next and immediately after the date of the said in part recited Letters Patent, as in and by the same, reference being thereunto had, will more fully and at large appear.

NOW KNOW YE, that in compliance with the said proviso, I, the said Alexander Bain, do hereby declare that the nature of my said invention and the manner in which the same is to be performed, are fully described and ascertained in and by the following statement thereof, reference being had to the Drawings hereunto annexed, and to the figures and letters marked thereon, that is to say:—

My invention consists,—

First, of a mode of arranging wind musical instruments together with apparatus in such manner that by the passage of perforated surfaces the notes of the instrument may be permitted to sound in such order as may be desired to produce a given tune; and

Secondly, my Invention consists of so arranging apparatus that by the act of playing one instrument another or several instruments may be simultaneously played on by the intervention of electro-magnetic apparatus.

And in order that my Invention may be most fully understood and readily carried into effect, I will proceed to describe the means pursued by me. It is well known that there are a great variety of wind musical instruments which depend for their sounds on the uncovering or leaving open and closing various openings, and according to the order in which the air is permitted to pass freely through or is stopped from passing through such openings so are the tunes played thereby.

FIG. 1.

Now the object of the first part of my Invention is to employ a moving perforated surface, such as paper, by which the holes of the instrument which may require to be closed or opened at a particular moment of time are closed or opened by the unperforated surface or perforated surfaces respectively coming opposite such holes of the instrument.

Figure 1 shows a transverse section, and Figure 2, a plan of so much of a wind musical instrument as will enable me to describe more fully the manner of carrying out this part of my Invention. I would, however, state, that the descrip-

tion of musical instrument to which my invention may be applied may be varied, these figures being shown for the purpose of more readily explaining this part of my invention, and the same are to be taken as an example. These figures show part of the wind chest of a musical instrument, which consists of a series of metal spring tongues, such as are well known and used in a variety of instruments which are called by different names. *a* is the air passage from the wind chest; *b*, a metal tongue; *c*, a covered chamber into which the tongue opens when pressed on by the air from within the air chest; *d* is an opening in each of such covered chambers; and so long as such openings are kept closed the tongues in those chambers will not be caused to sound; but so soon as the passage of air is free by the openings being uncovered, the tongues will be caused to sound their notes. So far this arrangement does not materially differ from instruments now made, and the same separately is not claimed by me as of my invention. *e*, *f*, and *g*, *h*, are two pairs of rollers which are kept in surface contact by means of india-rubber bands, *i*, *i*, or by other suitable means, and motion being given to the roller *e* will cause the paper *j* to be drawn through between the rollers, and over the perforated cover *c* of the several chambers; and if the paper should be wholly unperforated, none of the tongues would be caused to sound, although there be a pressure of air in the air chest; but if the paper be perforated opposite any of the openings *d*, the notes of those tongues will be sounded; and such would be the case if the openings belonged to other arrangements of wind instrument. It will therefore be understood that the paper is to be punctured at such places and in such order for each tune to be played that the punctured parts will come over the holes *d* where the notes are to sound, whilst those notes which are not to sound at any moment of time are to have their holes covered by the unperforated part of the paper or other perforated substance may be employed; but I believe paper will be found cheapest and most suitable for the purpose. By this mode of arranging wind musical instruments in combination with perforated paper or other material it will be evident that an instrument may be caused to play any tune within the range of its notes by simply perforating the paper or other substance in such order as to cover and uncover the openings in the order requisite for producing the tune. It will be evident that the time of each note will be regulated by the width of the perforations formed through the paper or other substance employed.

I will now describe the second part of my invention, which has for its object the playing on several musical instruments simultaneously by means of electro-magnetic apparatus intervened between the instruments. This part of my invention is capable of a great variety in its adaptation, and may

FIG. 2.

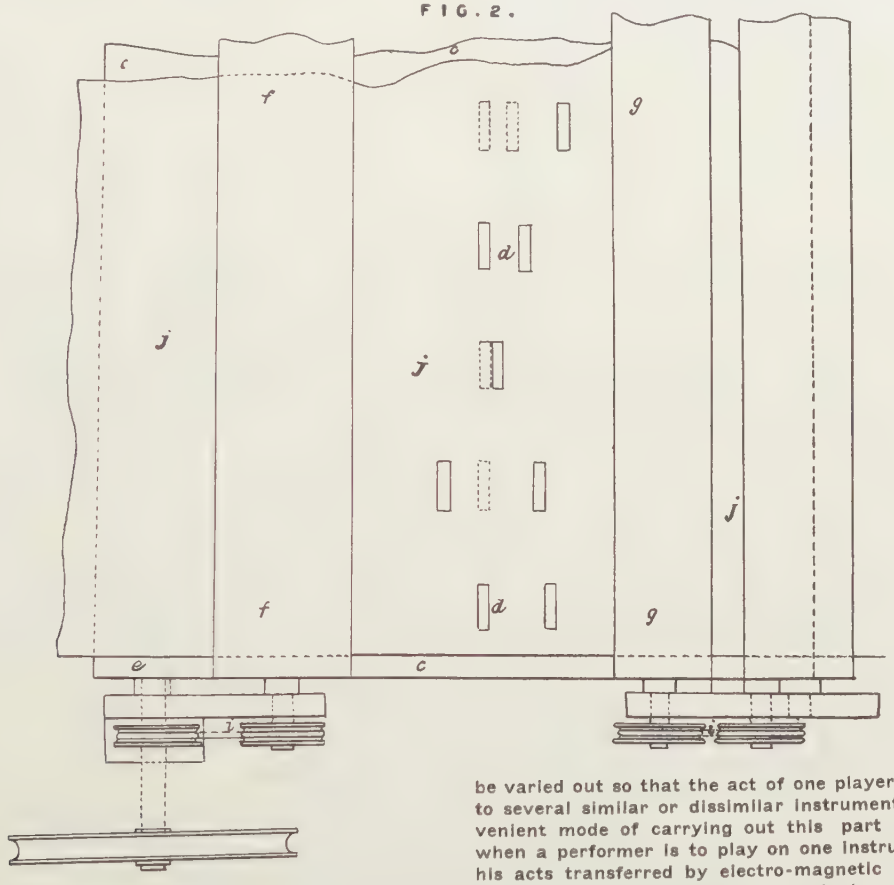

be varied out so that the act of one player may be transferred to several similar or dissimilar instruments. The most convenient mode of carrying out this part of my invention, when a performer is to play on one instrument, and to have his acts transferred by electro-magnetic apparatus to other instruments than the one he is playing on, is for the performer to play on a piano or other keyed musical instrument, and to have a means of connecting electric apparatus to another instrument or instruments. I would here state that the mode of arranging electro apparatus, so as to form electro magnets in circuits, being well understood, I have not thought it necessary to show galvanic batteries and complete apparatus for carrying the invention into practice, as it will only be necessary to show so much of apparatus as will enable a workman readily to apply my invention to a series of instruments so that they may be simultaneously played.

Figure 3 shows a side view of a finger key of a pianoforte or other keyed musical instrument on which the performer would play in the ordinary manner, and in doing so he will cause a contact to be made between two pieces of metal *a* and *b*, the one being on a spring, the other being fixed on the key board or frame of the instrument, as shown; and as these two pieces of metal are in connection with two wires, *c* and *d*, which are connected to the two poles of a battery, a circuit will be formed each time the metal surfaces *a* and *b* come

together, and as several temporary magnets may be in the same circuit, each will be influenced simultaneously, and may be made the means of actuating the keys of as many musical instruments; and such temporary magnets may be variously arranged for this purpose, as will be understood by Figure 4, which shows a side section of another key board of a musical instrument, which is supposed to be in the circuit which is completed or broken by the player in the act of performing on the other keyed instrument shown in the previous Figure. *e* is a temporary magnet of soft iron, which, when excited, gives motion to the armature, *f*, which, by the rod, *g*, forces down the key, *h*, simultaneously with the performer's striking down the key in the previous figure; and such would be the case with several other instruments if brought into the same circuit; and in this manner is each key of each musical instrument to be in communication by electric apparatus. By this arrangement a performer may be playing several instruments distant from each other; or, in place of the first instrument being played on by a performer, a self-acting apparatus may be employed, using perforated surfaces of paper or other suitable material. Figure 5 shows a section of so much of apparatus as will enable me to explain how this may be done. *i* is one of several metal rollers mounted on and turning with its axis, *j*, in suitable bearings not shown in the drawing. *k* is a wire in contact with the axis, *j*, which is in connection with one pole of a battery. *l* is a spring having at its free

FIG. 3.

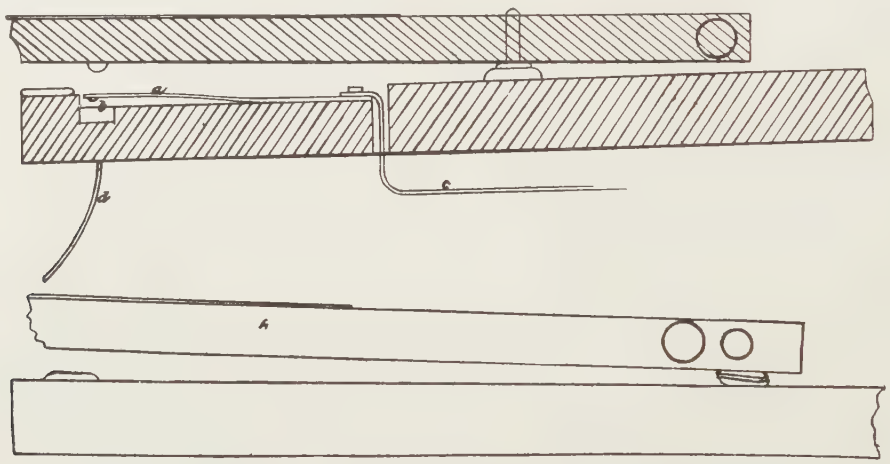

end a stud, *m*, and it is at the other or fixed end by a wire, *n*, connected with the other pole of the battery, and several electro-magnets suitably arranged for acting on parts of musical instruments may be arranged in the circuit opened and closed by this apparatus. *o* is a perforated strip of paper so perforated that the stud on the spring may pass through a perforation whenever the note which this circuit controls is to be sounded, the unperforated paper keeping the circuit open when this note of each instrument is not to be sounded.

Having thus described the nature of my invention and the manner in which the same is to be performed, I would remark, that I do not confine myself to the details herein described, so long as the peculiar character of my invention be retained; but what I claim is—

First, the arranging of wind musical instruments in such manner as to act with a perforated paper or surface, as herein described; and,

Secondly, I claim the application of electric apparatus to musical instruments, as herein described.

In WITNESS WHEREOF, I, the said Alexander Bain, have hereunto set my hand and seal, this ninth day of March, in the year of our Lord one thousand eight hundred and forty-eight.

ALEXANDER (L.S.) BAIN.

AND BE IT REMEMBERED, that on the ninth day of March, in the year of our Lord 1848, the aforesaid Alexander Bain came before our said Lady the Queen in Her Chancery, and acknowledged the specification aforesaid, and all and everything therein contained and specified, in form above written. And also the specification aforesaid was stamped according to the tenor of the statute made for that purpose.

Enrolled the seventh day of April, in the year of our Lord one thousand eight hundred and forty-eight.

LONDON:

Printed by George Edward Eyre and William Spottiswoode, Printers to the Queen's most Excellent Majesty. 1857.

The Direct System

The system was known and described as the direct or paper as a valve, method in which case the air went directly through the perforation of the sheet, against the tongue of the reed, but as shown in the drawings and described in the specification, the Bain system was impractical, although the idea or principle was correct, and had Bain persisted in his efforts and further developed his idea, the history of the player might read differently than it does today. But right here allow me to direct attention to the fact that the drawing of Bain as shown in the D. Appleton & Co. work is fraudulent for the reason that the reed is shown in position for operation with a suction bellows. Now as a matter of fact, the suction bellows was known in England at the time Bain was conducting his experiments, for it was only in December 28, 1846, that J. Carhart, of the firm of Carhart & Needham, of New York, invented the suction bellows. The bellows in vogue in Europe at that time was the pressure or force bellows, as witness the following extract from the Bain specification: (a) is the air passage from the wind chest; (b) a metal tongue; (c) a covered chamber into which the tongue opens when pressed on by the air from within the air chest; furthermore, if additional proof were necessary on the subject the arrangement of the system of rolls would furnish it as the sole function of said rolls was to enable the sheet to be drawn down tight over the tracker or reed board as clearly indicated by the drawing, so that to properly illustrate Bain's idea and what he actually invented (if so crude a device may be so dignified) the reed should be inverted, the tongue thereof shown beneath instead of above the reed block, and in combination with a pressure instead of a suction bellows.

The Carhart Bellows

So it came to pass that the bellows invented by Carhart of America became an important factor in the evolutionary process at the time under consideration—namely, 1847.

FIG 4

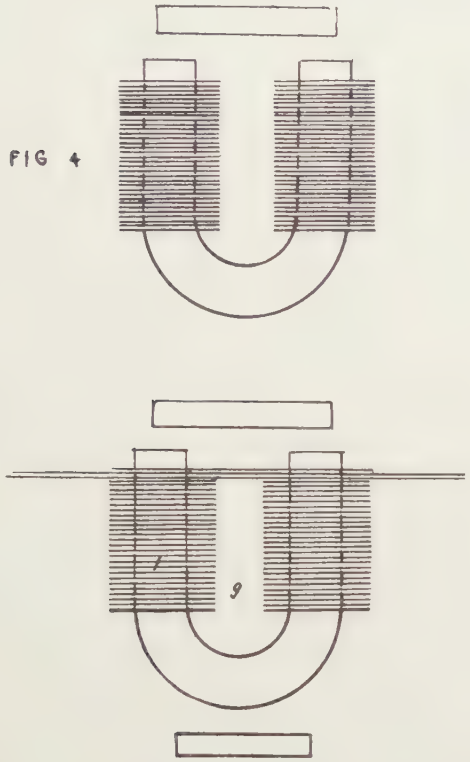

And that very fact was what made the difference between failure in Europe in 1847 and success in America in 1876, for by means of the Carhart suction bellows the perforated sheet was held down to the seat of the tracker or reed box by suction or external air pressure, in which case the system of rolls shown and described by Bain were superfluous. That Bain must have been ignorant of the Carhart invention is evident by the fact that the patent covering it did not issue till December 28, 1846, and Bain's patent was issued March 9, 1848, at which time the Carhart bellows was not introduced in the United States.

It will be seen, therefore, that the principle involved in the patent of Seytre and Bain and the one to Dawson following, were not identical, that in one case the paper acted directly to cut off and regulate the entrance of the air to the reeds or pipes while the other had an intervening mechanism between the paper and the string, so that in the Seytre invention the sheet acted indirectly upon the reeds, pipes or strings.

And thus we have dealt with three personages—Morse, Seytre and Bain—who were alleged to have invented players, but the only thing shown, described or claimed in their several applications and that enters into the make up of the modern player is first, the perforated sheet, the rolls and a means for feeding the sheet, all of which elements are comprised in the Seytre patent. Hence we must go further in the wake of progress until we have found a sufficient number of elements shown and described to enable a skilled mechanic to proceed with the construction of the present interior player. We will have to continue examining one patent after another until we shall have discovered embodied in patents and inventions all or at least a sufficient number of the essential player elements to enable one to successfully build them with information obtained.

Thus the Bain patent passed into oblivion like the Morse and Seytre patents and nothing more was heard upon the subject until 1848, when Dawson of England filed an application for a patent that, while very elaborate in detail, nevertheless shows very little, if any, advance on the Seytre and Bain ideas. Had the English patent office been familiar with the state of the art and the existence of the Seytre invention it is doubtful if Dawson or even Bain could have obtained recognition as a patentee of what they had shown and described; in fact, the three patents named, might with perfect justice be treated as one, for if the English patent law had been founded upon the same principle as the American system, then neither applicant would have obtained a patent. But said English laws were not identical with ours, hence the duplication of patents by which English and French inventors were enabled to obtain patents on virtually the same things. The object was dropped by Dawson just as it had been discarded by his predecessors and the problem was lost sight of until the next year, when an American patent was issued to Hunt and Bradish, two gentlemen of Warren, Ohio.

FIG 5

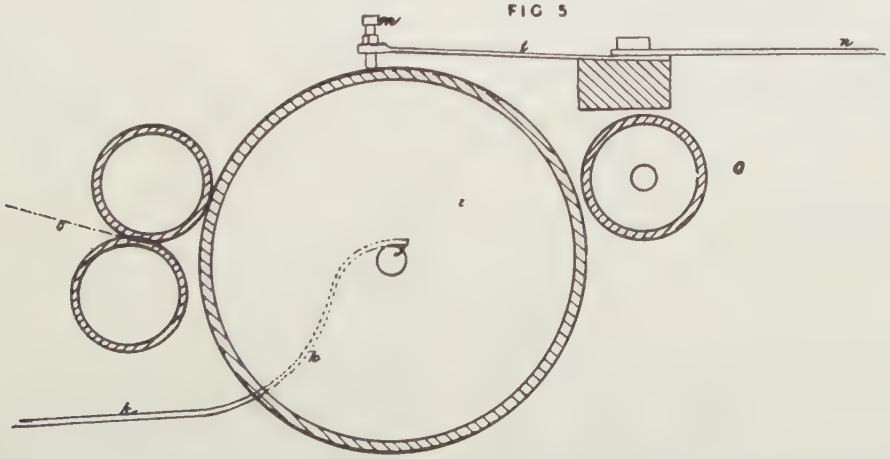

DAWSON OF ENGLAND PATENT, 1848

THE Dawson idea does not essentially differ in principle from the Bain method, the distinction being mostly in construction. A scale of pipes are substituted by Dawson for the reeds employed by Bain. The action, which consists of a bellows and its connections, and operative parts, being located beneath a flat surface or table, which constitutes a support or raceway to uphold and guide the sheet, the bellows being attached beneath said support and a set of pipes located above said support and normally resting upon the sheet, the air being forced up through the perforations in the sheet and into the pipes as the latter is drawn between the bellows and the pipes. But that is substantially what Bain did, and in that respect it is no improvement over Bain. On the contrary it is a positive disadvantage compared with the Bain plans and constitutes a serious objection thereto; that is if the pipes were wider than the reeds the sheet would have to be correspondingly broad so that it would require a sheet several feet wide to meet the requirements of the plan, and the wider the sheet the greater becomes the danger from shrink or swell. It follows, therefore, that any increase in the width of the perforated sheet is undesirable. Hence the objection to the Bain and Dawson methods.

Musical Instruments, Etc.

A. D. 1848.....No. 12,307

DAWSON'S SPECIFICATION.

TO ALL TO WHOM THESE PRESENTS SHALL COME, I, CHARLES DAWSON, of Hardinage Street, Islington, in the county of Middlesex, Professor of Music, send greeting.

WHEREAS Her most Excellent Majesty Queen Victoria, by Her Letters Patent under the Great Seal of the United Kingdom of Great Britain and Ireland, bearing date at Westminster, the Second day of November, in the twelfth year of Her reign, did give and grant unto me, the said Charles Dawson, his exors, admors, and assigns, Her special licence, full power, sole privilege and authority, that I, the said Charles Dawson, my exors, admors, and assigns, and such others as I, the said Charles Dawson, my exors, admors, or assigns, should at any time agree with, and no others, should and lawfully might make, use, exercise, and vend my invention of "CERTAIN IMPROVEMENTS IN MUSICAL INSTRUMENTS, AND IN APPARATUS TO BE USED IN CONNECTION WITH MUSICAL INSTRUMENTS," within that part of the United Kingdom of Great Britain and Ireland called England, Her Dominion of Wales, and Town of Berwick-upon-Tweed, and also in the Islands of Jersey, Guernsey, Alderney, Sark, and Man, and in all Her Colonies and Plantations abroad, during the term of fourteen years next ensuing; in which said Letters Patent there is contained a proviso, requiring that I, the said Charles Dawson, shall particularly describe and ascertain the nature of my said invention, and in what manner the same is to be performed, by an instrument in writing under my hand and seal, and cause the same to be enrolled in Her said Majesty's High Court of Chancery within six calendar months next and immediately after the date of the said in part recited Letters Patent, as, reference being thereunto had, will more fully and at large appear.

NOW KNOW YE, that in compliance with the said proviso, I, the said Charles Dawson, do hereby declare that the nature of my invention, and the manner in which the same is to be performed, are particularly described and ascertained in and by this present Specification or instrument in writing, reference being had to the several Drawings hereunto annexed, and in which said several Drawings similar parts are marked and referred to by similar letters or figures (that is to say):—

The first part of my said invention consists of a mode or modes of producing various notes on wind musical instruments, and which notes I produce upon an instrument constructed according to this part of my invention by means or with the aid of a moveable tube or sliding plate, placed within the instrument and having orifices communicating with chambers placed along the side of the instrument, such chambers being furnished with orifices to be stopped or opened by the fingers or keys in the usual manner for the purposes of producing the notes.

In Figs. 1, 2, 3, and 4, of the said Drawings hereunto annexed, I have shewn the mode in which I apply the first part of my said invention to German flutes. Fig. 1 represents a longitudinal section, and Figs. 2 and 3 transverse sections through the lines A, A, and B, B, on Fig. 1, respectively, of a portion of such a flute. *a*, *a*, is an internal metallic tube

FIG. 1.

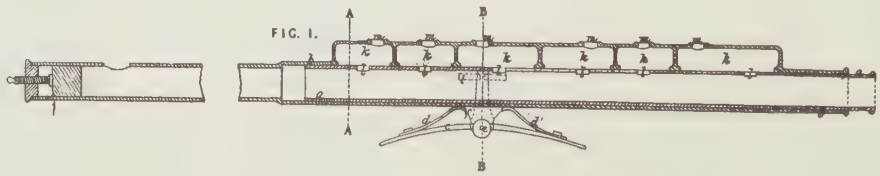

fitted so as to be air-tight, but slide freely within the outer tube *b*, *b*. A double key or lever *c* is at its centre mounted upon a pin or axis *e*, and is provided with springs *d*, d^1, which will maintain each end of the lever equally distant from the exterior of the flute unless pressure be applied at either end. The pin or axis *e* of this lever is supported by arms, *f*, f^1, projecting from the lower side of the outer tube *b*, and entering into openings in the lever as shewn in Fig. 4, that Figure being a view of the key or lever *c*, as seen when looking towards the instrument. The lever *c* is furnished with arms *g*, g^1, which embrace the sides of the outer tube and have slots in their sides to receive the pins *h*, h^1. The pins *h*, h^1, are fixed to the inner tube *a*, *a*, and project through slots *i* in the sides of the outer tube in which they

work, and are capable of sliding freely. When either end of the key or lever *c* is pressed towards the tube, the arms *g*, g^1, will act upon the pins *h*, h^1, fixed to the inner tube, and cause that tube to move in one direction on the other within the outer tube according to the end of the key or lever to which the pressure may be applied.

The finger holes used in playing the flute, and to which the fingers are to be applied, are made in chambers (in the Figures marked *k*), formed or fixed upon the outer tube of the flute. Each of these chambers is open at the bottom, and is only closed by the inner tube *a*, *a*, through which there is an orifice *l* forming a communication between the interior of the flute and the chamber, and through the chamber with the finger hole *m*. It is well known that in such instruments as the flute, flageolet, and clarinet, the ordinary finger holes will not enable a performer conveniently to produce all the

FIG. 2.

FIG. 3.

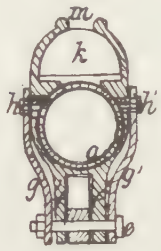

notes required in performing musical pieces, and therefore such instruments are now generally furnished with various keys for enabling performers to produce the various notes required; but notwithstanding the addition of such keys to such musical instruments they are still not capable of producing notes of all the various descriptions or degrees of pitch which the performer may desire, and the performer frequently finds considerable difficulty in gliding from one note to another. In a flute constructed in the manner now described, the inner tube *a*, *a*, may by means of the key or lever *c* be moved up or down as the performer pleases, and he is thus enabled to vary the note or pitch of the tone which

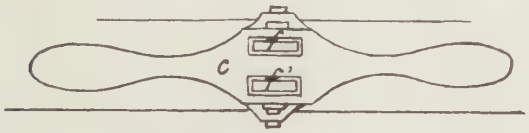

FIG. 4.

FIG. 5

would otherwise be produced by any particular fingering of the instrument, and so obtain the ordinary semitones (as they are commonly called), and many other notes which could not be produced from instruments of the ordinary construction. And it is hardly necessary to say that if the pitch of the tone which would be produced by any particular fingering is to be raised, the inner tube must be moved upwards towards the top of the flute or embouchure, and when the pitch is to be depressed, the inner tube must be moved in the opposite direction. As in a flute constructed in the manner just described all the orifices are placed along one side of the flute, a sliding plate may be used in lieu of the sliding tube, the plate being made to fit against that side of the instrument upon which the chambers are placed, as before mentioned, and orifices being made in the plate for the purpose of making a communication between the inside of the flute and each of the chambers, in the manner as hereinbefore described with reference to the sliding or movable inner tube. When a plate is used in lieu of a tube, I make the concave surface of it with the same curve as the interior of the flute, so as to make the interior a complete circle, and I sink the plate into the substance of the flute, making the edges of the plate to work in grooves, as shewn in Fig. 5, which figure represents a transverse section of the tube of a flute so constructed.

Instead of making the tube to move up and down within the flute in the manner which has been described, the tube may be made so as to be capable of a circular motion only within the flute, but the orifices in the tube intended to form the communications between the interior of the flute and the chambers are to be cut longer and spirally in the tube,

FIG. 8.

FIG. 10.

FIG. 9.

FIG. 11.

so that by turning the tube in the one direction or the other, the part of the orifices which may form the communications with the chambers, may be nearer to or further from the embouchure, as may be required by the performer for producing variations in the pitch of the notes. For the sake of greater perspicuity, I have described the application of this part of my said invention to a German flute only, but the mode of applying this part of my invention to various other wind musical instruments, the notes of which are produced by closing or opening lateral

FIG. 12.

FIG. 13.

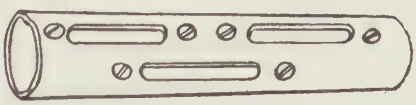

orifices, is the same in substance as that which has already been described.

The second part of my said invention consists of a mode or modes of producing various notes on wind musical instruments, and which notes I produce upon an instrument constructed according to this part of my invention by means of a longitudinal valve or longitudinal valves, by the aid of which a performer can open the side of the instrument at such part or parts as may be requisite from time to time for enabling him not only to produce various notes upon the instrument, but also to subdivide many parts of the musical scale to a greater extent than has hitherto been attained on such instruments.

In Figures 6, 7, 8, 9, 10, 11, and 12, of the Drawings hereunto annexed, I have shewn one mode of carrying this part of my said invention into effect. Fig. 6 is a longitudinal section of parts of a German flute constructed according to this part of my invention, shewing a single valve placed

along on side of the flute. Fig. 7 is a plan of that side of the flute upon which the valve is placed. Figs. 8 and 9 are transverse sections of the instrument, as taken through the lines C, C, and D, D, respectively, of Fig. 6. This flute is made of metal, and is curved, as shewn in Fig 6. Along one side of this instrument is made a slot *a*, formed with lips *c*, *c*, as shewn in Fig. 10, which represents a transverse section of the tube of the flute. A flexible and elastic longitudinal valve or band *d*, *d*, is formed, with a rib or projection along one side of it, this rib being intended to project

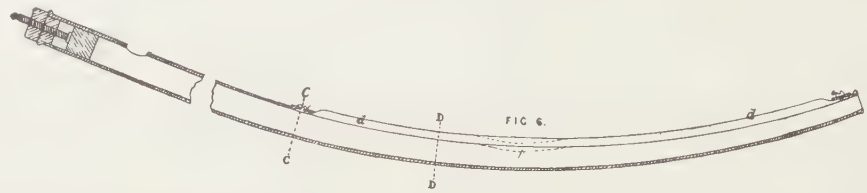

FIG. 6.

FIG. 7.

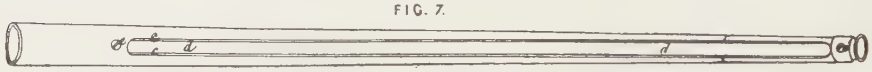

through the slot, and when the valve is not pressed down to project beyond the exterior of the flute. This valve is made of a spiral metallic spring of the form, and covered with leather, india-rubber, or other convenient material, in manner shewn in Fig. 12, which is an enlarged perspective view of part of this valve or band. Instead of making the valve of a metallic spring, covered with leather or india-rubber, the valve may be made entirely of india-rubber, or of any other material proper for the purpose. The longitudinal valve is to be made sufficiently wide to fill up the interior part of the slot *a*, and so that the projecting sides or edges of it may lie or press against the lips *c*, *c*, of the slot.

The valve or band is fastened at each end by a pin *e*, and it is to be stretched between the two pins, *e*, e^1, to such a degree as to cause the projecting sides or edges of it to be pressed against the lips *c*, *c*, of the slot, and the tube of the flute is made in a curved form, as shewn in Fig. 6, for the purpose of more easily obtaining the requisite degree of pressure by the sides or edges of the valve against the lips of the slot. It will thus be seen, that when the valve or band *d*, *d*, is stretched and fixed in its place, the slot will be closed by it, so as to prevent the passage of any air through it; but if any part of the rib of the valve *d* be pressed by the finger, so as to force a part of the valve inwards and away from the lips *c*, *c*, as shewn in the transverse section, Fig. 11, and indicated by the dotted lines at *p*, in Fig. 6, an opening will be made for the passage of air from the tube *a*, and when the pressure of the finger is removed the band *d*, *d*, will again return to its place and close the slot. In a German flute of the ordinary construction, notes are produced differing from

FIG. 14.

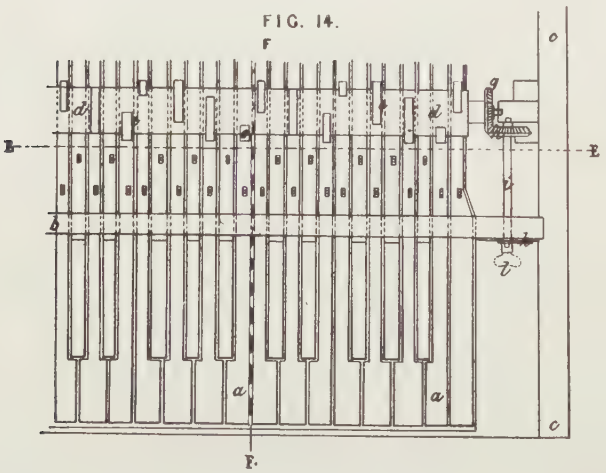

each other in pitch by means or with the aid of lateral orifices placed at certain parts of the instrument, the position of which, however, the performer has no power to vary; but in a flute constructed with a longitudinal valve, as hereinbefore described, the performer is at liberty to press his finger upon any part of the valve for the purpose of obtaining an orifice there, and may thus produce not only the various notes usually obtained upon the flute, but also many other notes which could not be produced upon a flute of any ordinary construction. Instead of constructing a flute with a single longitudinal slot and valve, it may be made with several of such slots and valves, as shewn in Fig. 13, each of the slots and valves in that case being made shorter, but so that the whole of the slots and valves will together extend the same distance along the flute as the single slot and valve would. And in this case I arrange the slots and valves in two lines, as shewn in Fig. 13, in order to enable the performer to produce an orifice or opening at any part or parts

FIG. 15.

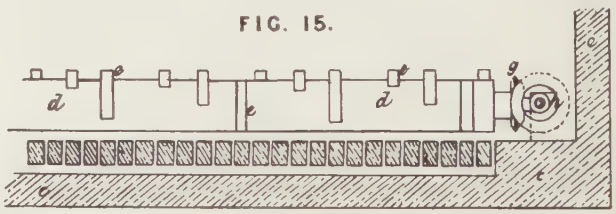

in the same way as if there was one continuous slot and valve. I have described the details of this part of my said invention also as applied to a German flute only; but the mode of applying this part of my invention to various other wind musical instruments, the notes of which are produced by closing and opening lateral orifices, is similar to that which I have described in connection with a German flute.

The third part of my said invention consists of apparatus to be applied to the key boards of pianofortes, organs, musical instruments played by means of similar key boards, and which apparatus is applicable for preventing the action of all or any of the keys of the board used for sounding such of the notes as do not occur in the key of any piece to be played. I have in Figs. 14, 15, 16, and 17, of the said Drawings hereunto annexed, shewn the mode of constructing the apparatus which forms this part of my invention, and the manner in which it is applied to the key board of a pianoforte. Figure 14 shews a plan of part of a key board, and of the said apparatus; Figure 15 is a section on the line E, E, on Fig. 14, and Fig. 16 is a section on the line F, F, on Fig. 14. *a*, *a*, are the keys of the instrument; *b* is the name board; *c* portions of the casing, all of which are of the ordinary description; *d*, *d*, is a roller, which is placed behind

FIG. 16.

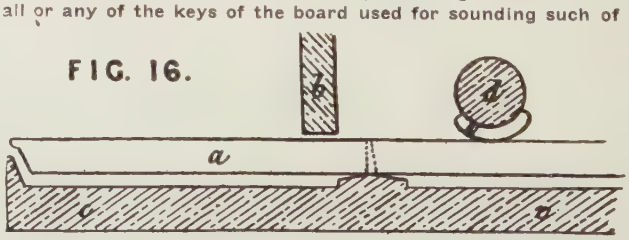

the name board, and also behind the centre pins upon which the keys move, upon which roller projections *e* are fixed, in manner herein-after described. This roller extends from side to side of the key board, and the axes of it are at each end supported in suitable bearings, fixed upon the framing of the instrument. The roller must be placed at such a distance above the surface of the keys of the key board as will allow that part of each key which is under it to be raised in the usual manner, when the action of such key is not intended to be prevented, as is shown in Fig. 17. Upon one end of the axis of the roller is fixed a toothed bevelled wheel *g*, geared into another bevelled wheel *h*, which is fixed on a

FIG. 17.

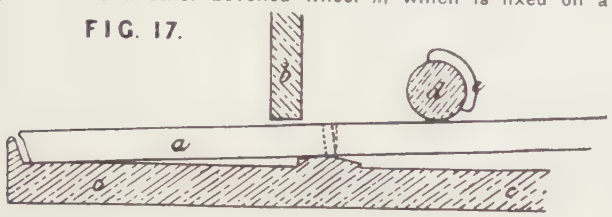

spindle *i*, and that spindle is at one end mounted in a suitable bearing, the other end of it passing through the name board, and having a pointer fixed upon it, as shewn at *k*, Fig. 14. Upon the name board, and surrounding the spindle of the pointer is an index plate, marked so as to shew the extent to which the spindle and consequently the roller is to be turned in order to bring any part of the roller which may be desired into operation. The outer end of the spindle projects a little beyond the pointer, and that projecting part is squared, so as to receive the key *l*, by means of which the spindle may be turned. Upon the roller *d* are placed projections *e*, which partly encircle the roller, and which are not quite so wide as the keys upon which they are to act, and the height of each of these projections must be such, that when turned down to the under side and next to the key against which it acts, it will (in a manner shewn in Fig. 16) prevent that key from being used so as to produce a note. I divide the circumference of the roller into twelve equal parts, that being the number of the major keys of the diatonic scale, in which music can be played, and I place the projections already mentioned upon the roller, in such a manner that each line or point of separation between those divisions will be appropriated to one or other of the twelve keys of the diatonic scale. The order in which these projections are placed upon the roller will depend upon the order in which the different keys of the scale may be desired to be arranged or produced. The chief object of this apparatus being to assist the teacher in the instruction of pupils, it is hardly necessary to place any projections upon the roller to act upon the keys used for playing what are usually called the sharp or flat notes, but merely to apply the apparatus to the long keys used for producing what are usually called the natural notes, those being the keys which pupils are most apt to strike improperly, so as to produce false or incorrect notes. For this reason, therefore, I ordinarily apply only seven projections upon the roller for each octave; but, of course, the same principle may be carried out and extended to each of the twelve keys in every octave of the board. The line or point upon the roller intended to be used in the key of C major will, of course, in this mode of arranging the apparatus, be entirely without any projection, and although any other order of arranging the keys may be adopted, I prefer to arrange them according to a usual order of modulation, as herein-after described. One of the before-mentioned lines or points of the roller being appropriated to the natural key of C major, I appropriate the next to the key of G major, and, therefore, I place projections upon the roller to act upon or fix every F natural key of the key board so that it cannot be used to produce a note. And as according to the arrangement just mentioned, the F natural keys of the board will not be required in the next four keys of the scale, I continue the projections just mentioned to the fourth of the nextly following lines or points of division upon the roller. The next key in order of modulation being D major, I make, at the next line or point of division upon the roller, a projection to act upon or fix every C natural key of the board, in like manner as just described with respect to the F natural keys, and, as before mentioned, continue those projections to the fourth of the next following lines or points of division upon the roller. The next key in order being A major, propections are to be made for acting upon the G natural keys, and those projections carried forward as before, and in like manner proceeding with the other keys, projections must be made for acting upon the D natural keys of the board in the key of four sharps, upon the A natural keys in the key of five sharps, upon the E natural keys in the key of six sharps or six flats, and upon the B natural keys in the key of seven sharps or five flats, the projections being in each case continued to the fourth line or point of division upon the roller as before mentioned. As according to this arrangement the keys for producing the sharp and flat notes are always left at liberty, the remaining keys of the scale will be produced without adding any other projections to the rollers than those already described. The index plate should be marked in the order in which the projections on the roller are arranged, so that by turning the pointer to any particular key marked on the index plate the appropriate division of the roller may be turned down and its projections brought into action. In Fig. 18 I have shewn the manner in which I mark an index plate when the apparatus is arranged in the manner which I have described, the names of the several key notes being marked upon the index plate, but the index plate may be marked with numbers or in any other way which might be deemed most convenient.

FIG. 18.

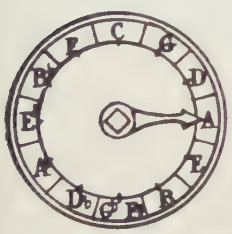

The fourth part of my said Invention consists of a mode or modes of constructing additional keys or apparatus to be applied to or used in connexion with the key boards of pianofortes, organs, and other musical instruments, played by means of similar key boards, for the purpose of enabling the performer by the movement of a single finger to cause two or more of the keys of the board to be acted upon so as to produce two or more notes at the same time. Figures 19, 20, 21, 22, 23, and 24, of the said Drawings hereunto annexed, shew the mode of constructing the apparatus forming this part of my said Invention, and the manner in which it is applied to the key board of a pianoforte. Fig. 19 represents a plan of part of the key board of a pianoforte with part of an apparatus constructed according to this part of my Invention applied thereto. Fig. 20 is a section of the same parts as taken through the line G, G, in Figure 19. Figs. 21 and 22 are also sections of the same parts, shewn as taken through the lines H, H, and J, J, respectively. The parts of a key board and keys, shewn in these Figures, are of the ordinary construction. *a*, *a*, are the keys; *b*, *b*, is the name board; and *c*, *c*, portions of the casing of the pianoforte. The purpose of this part of my Invention is attained by means of additional keys or levers which are attached to a series of spindles or rods *d*, *d*, mounted upon axes, and placed in a horizontal position above the key board and behind the name board. These spindles or rods are made of metal, and their axes are mounted in suitable bearings in a metal frame *e*, fixed behind the name board. The bearings are lined or bushed with a soft material in the ordinary manner to prevent noise, and between the bearings and the ends of the rods washers of a soft material are placed for the same purpose. Upon each of these rods are fixed two or more sockets *f*, *f* (two only being shown in the Figures), into each of which sockets is to be fixed a key or lever *g*, made of wood, or other convenient material, as shewn in Figures 23 and 24, these keys or levers being made sufficiently long to extend from the rods to which they are respectively attached, and to protrude beyond the name board (a part of which is cut away to permit them to come through), and rest upon the tops of the ordinary keys of the key board, upon which they are respectively intended to act, as shewn in Figures 19, 21, and 22, and so form a series of additional keys, which the performer may use in playing or not, as he may think proper. The lengths of these parts

of the additional keys or levers which are behind the name board vary according to the distance of the rods to which they are affixed from the name board. The parts of the additional keys or levers which protrude beyond the name board are faced with ivory, or other suitable material, so as to make them smooth for the finger, in the same way as the ordinary keys, and they may be made of different lengths, and colored differently, so as to distinguish those which are intended to act on the long keys of the key board, from those which are intended to act on the short keys, as shewn in Figure 19. The rods already mentioned are all mounted on the same horizontal plane, or nearly so, and one behind another at such a distance from each other that they will turn or move freely as far as necessary without coming into contact with each other. Each rod is also placed so that each of the keys or levers mounted at the ends of it shall be immediately above the ordinary key of the key board, upon which it is intended to act as shewn by the dotted lines in

FIG. 19.

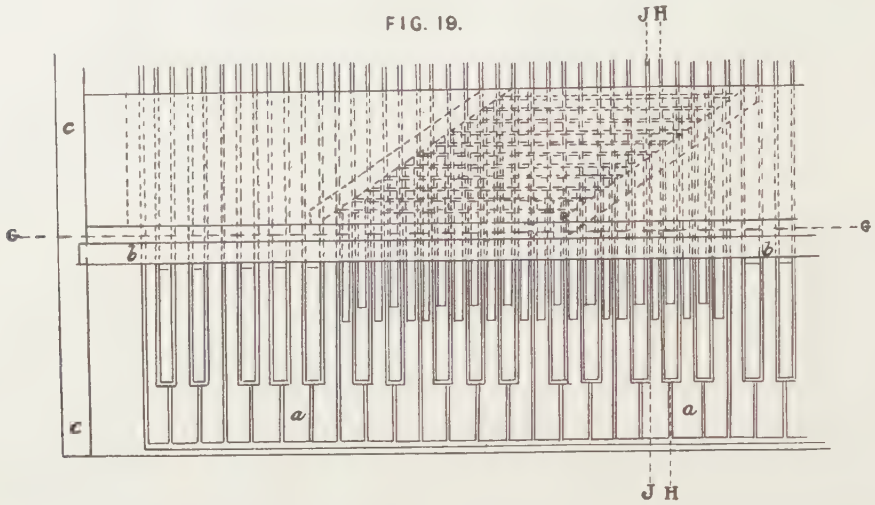

or levers are shaped in such a manner that their outer ends will rest upon the ordinary keys, upon which they are to act, and in a convenient position for being operated upon by the fingers of the performer. To prevent noise, the ends of these additional keys or levers have pieces of leather, or other soft material placed on their under sides, where they touch the ordinary keys upon which they act, a pair of additional keys or levers being firmly fixed upon a rod in the manner described. If the key or lever at one end of the rod be pressed down by the finger, the key or lever at the other end must also be pressed down at the same time, and thus the performer acquires the power, with an apparatus constructed in the manner described, to strike two keys, and to produce two notes at the same time. In the apparatus shewn in the Figures, the two ordinary keys acted upon by each pair of additional keys or levers are octaves to each other; but pairs of additional keys or levers may, however, be mounted upon spindles or rods in the manner I have described, nearer to or further from each other, and so that the two ordinary keys of the board acted upon by each pair of additional keys may be fifths or tenths to each other, or sound any other chord which may be desired. And it will be observed that the number of pairs of additional keys or levers, which will be contained in a set of apparatus constructed according to this part of my invention, will depend upon the interval between

FIG. 20.

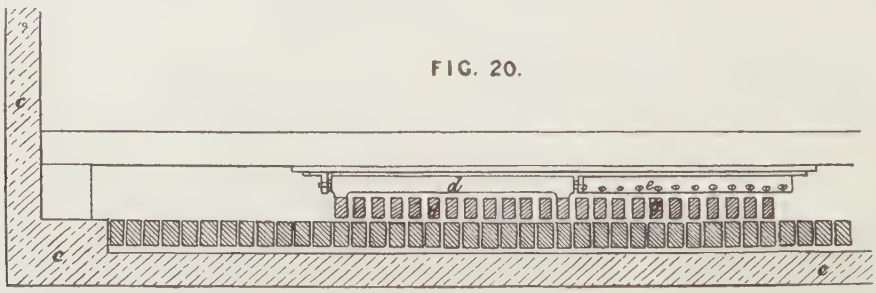

FIG. 21.

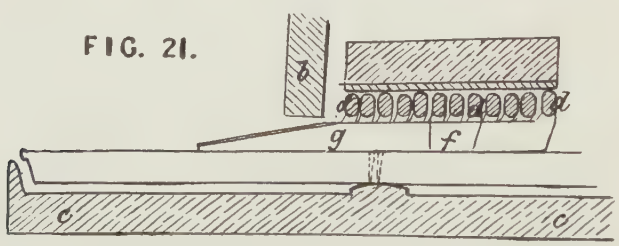

FIG. 22.

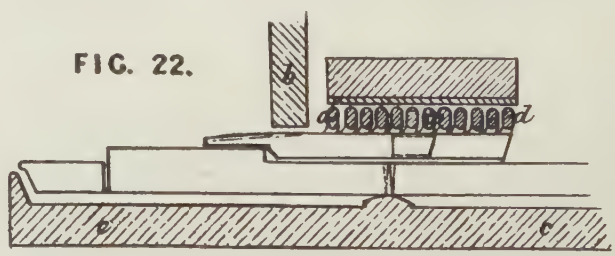

Figure 19. The mode of mounting these rods in their frame is shewn more clearly in Figure 23, which is a view from the underside of two of these rods, with their keys or levers so mounted. Fig. 24 is a perspective view of one of these rods, with a pair of keys or levers fixed upon it, the keys or levers shewn in this Figure being intended to act upon two of the long ordinary keys of the key board. The additional keys

each pair of such additional keys, and will be equivalent to the number of semitones contained in that interval. Three or four additional keys or levers might also be mounted upon each spindle, in the same manner as already described, so as to enable the performer by the movement of a single finger to cause three or four of the keys of the key board to be acted upon at the same time. I have only shown the apparatus extended to twelve pairs of additional keys, this being

FIG. 23.

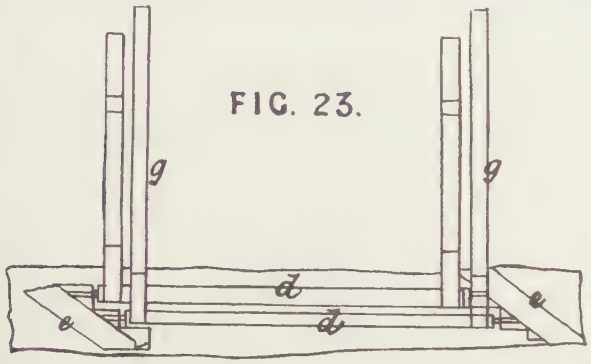

I believe the most convenient number, and I prefer to furnish pianofortes with two such apparatus, the one apparatus being placed in a convenient position in connection with twelve of the ordinary keys of the upper part of the key board, and the other apparatus being placed in a convenient position in connection with twelve of the ordinary keys of the lower or left hand part of the key board, so as to enable the performer, by means of this part of my Invention, with one hand to have a more extensive command over one half of the key board, and with the other hand to have a more extensive command over the other half of it. But if a pianoforte should be intended to be used chiefly for two persons to play upon, it may be desirable that three sets of apparatus made according to this part of my Invention should be added to the instrument.

The fifth part of my said Invention consists of a mode or modes of constructing apparatus for admitting and regulating the admission of air to the pipes or other parts of organs, and other musical instruments, so as to produce the required notes, in manner herein-after described. In Figures 25, 26, 27, and 28, I have shewn the mode in which I construct certain parts of an organ according to this part of my Invention. In Figure 25 is represented a longitudinal section, and in Figure 26 a transverse section of such an organ; *a*, *a*, are the bellows and regulator constructed in a manner usually adopted in making barrel organs, and these bellows are put

FIG. 24.

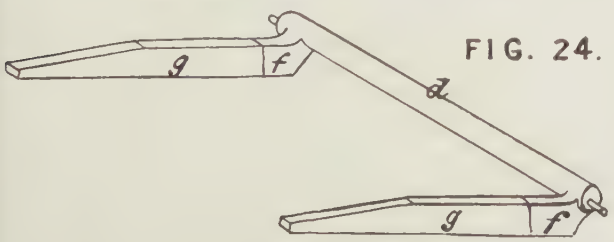

in action by cranks *b*, on a shaft *c*, which is turned by means of a winch or handle in the usual manner. Two rollers *d* and d^1 are mounted in suitable bearings at the sides of the instrument, and are caused to revolve in the direction indicated by the arrows for the purpose of drawing the paper or other thin material, herein-after described, between the bottoms of the air channels, and the leather or flexible top of the chamber *p*. These rollers are put in motion by wheel work, mounted at the side of the instrument, and connected with the crank shaft *c*, as shewn in Figure 27; *f* is a toothed pinion fixed to the crank shaft, and gearing into a toothed wheel *g*, to which is affixed a pinion *h*, which gears into a wheel *i*, and this wheel *i* gears into a wheel *j*, these wheels *i* and *j* being affixed to the ends of the axis of the rollers *d* and d^1, respectively. The rollers *d* and d^1 are pressed together by springs acting on their bearings, so that a sheet of paper or other thin material inserted at and passing to them from the shelf *m* will be drawn along by the action of the rollers, and a curved board and shelf *w*, *w*, are fixed behind and below the rollers, so that such a sheet, after passing between the rollers, will be turned back, in the manner indicated by the red line *l*. The shelf *m* is mounted upon hinges at m^1, and under the moveable end of this shelf is place a cross bar *e*, which is pressed upwards by the springs *n*, *n*. This cross bar *e* is connected at each end by means of rods *t* and t^1, with valves *u* and u^1 opening downwards in the air passages *v* and v^1, so that by pressing down the shelf *m* air may be permitted to flow up from the bellows to the pipes of the instrument. The moveable end of the shelf *m* is notched or

FIG. 25.

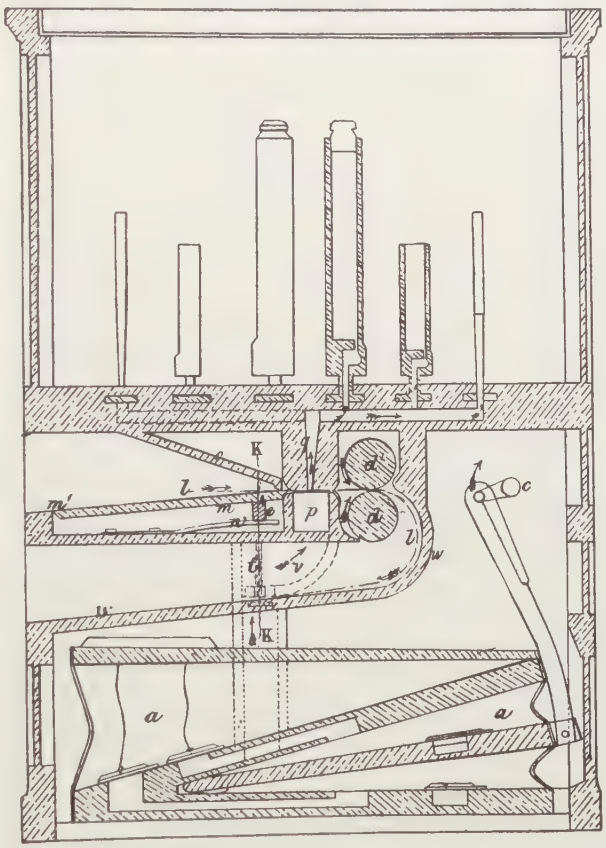

formed with projections, which are made to fit accurately at their sides into corresponding notches in the upper board, *o*, *o*, as shewn in Figure 28, that Figure being a transverse section of part of the apparatus shewn, as taken through the line K, K, on Figure 25. These notches allow the projections of the shelf *m* to be pressed up by the springs *n*, *n*, acting on the cross bar *e* sufficiently high to cause the valves *u* and u^1 to be closed; but when the shelf is depressed, and any thin material such as paper is pushed over the moveable end of the shelf *m* so as to be drawn forward by the rollers, the paper or other thin material will prevent the projections at the end of the shelf from passing up into the notches in the board, *o*, *o*, above, and will thus keep down the shelf *m* and the cross bar *e* sufficiently far to keep the valves *u* and u^1 open for the passage of air up to the instrument through the chamber *p*. The chamber *p* is covered on its upper side with leather or some other flexible material, which is or can be made sufficiently air-tight, and this covering is perforated with a number of holes, there being one hole made immediately be-

low, and of the same size as each of the openings of the air channels q, q, which lead up to the pipes of the instrument, so that a sheet of paper or thin material being inserted between the covering of the chamber p and the channels q, q, above it, no air can pass from the chamber into any of those channels, unless there be some perforation in that part of the sheet which happens to be placed between some hole in the covering of the chamber p and the corresponding opening of the channel above. The covering of the chamber p is made flexible for the purpose of preventing the escape of air from the chamber in any other way than into the air channels q, q; and this is effected by the air (when it is forced into the chamber) pressing the covering of the chamber up against

FIG. 26.

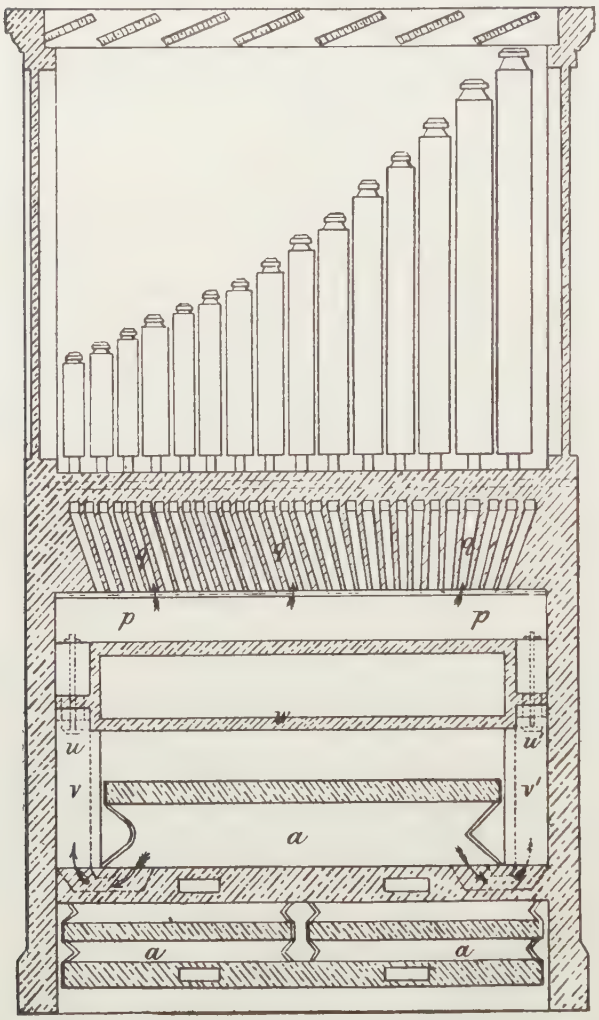

the sheet of paper or other thin material, and also pressing the sheet of paper or other thin material against the bottoms of the air chambers. Fig. 29 represents a portion of a sheet of paper or other thin material, perforated so as to admit and regulate the flow of air up to the pipes which are to be sounded; one end of this paper or thin material is to be passed along the shelf m, and entered between the rollers d and d^1, so that by their action it may be drawn along the covering of the chamber p and the air channels q, q. The holes are made in the sheet of paper or thin material in proper places for allowing the passage of air up to each of the pipes as it is intended to be sounded. The width of each hole in the sheet of paper is equal to that of the opening of the air channel below which it is to be drawn, and the length of the hole must be made in proportion to the intended duration of the note which is intended to be sounded, as the sheet of paper is drawn along by the rollers. The number, duration, and succession of the notes to be sounded by the instrument may in this way be regulated at pleasure, and the time may also be regulated by the degree of speed given to the rollers when they are in motion. Each of the air channels leads up to a set of pipes of the ordinary description,

FIG. 27.

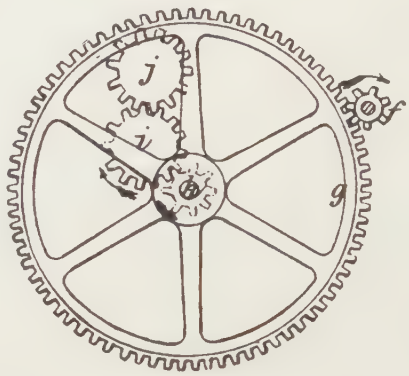

and which may, of course, be varied in any manner that shall be desired; and the instrument is furnished with stops and a swell of the ordinary description. The sides of the sheet of paper or other material, perforated in the manner above described, must be cut straight, and so as to fit exact-

FIG. 28.

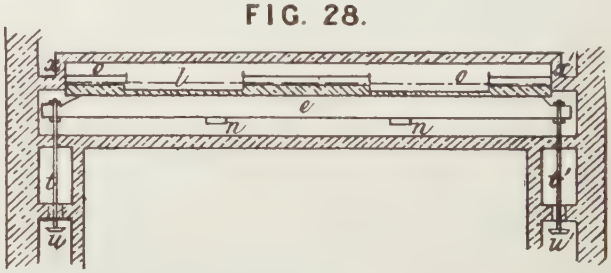

ly between the side pieces x and x^1 of the board o, o, in order that the sheet may not vary from the proper line of course which is requisite, in order to cause the holes of it to be brought accurately to the places at which they are to admit the passage of air into the various air channels. The width

FIG. 29.

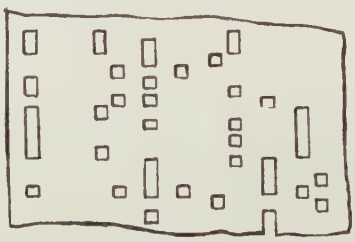

of the opening into each of the several air channels being the same, and those openings being placed at the same distance apart, the construction of the shelf m and the parts connected with it may be varied, so as to enable the performer, by moving the sheet of paper or other thin material to the one side or the other, to cause it to be drawn through under a different series of openings or air channels, and thus transpose the music produced by the instrument. I have described the air channels q, q, as leading up to pipes or sets of pipes (such as are usually placed in organs), and which are to be

sounded by means of currents of air passing up through the perforated sheet of paper or thin material before mentioned; but instead of these air channels leading up to such pipes they may be made to lead up to a set or sets of instruments of any other description, which can be sounded by means of currents of air, or they may be made to lead up to a set or sets of any other description of apparatus, from which a succession of musical sounds can be produced. One great advantage resulting from the use of a sheet or sheets of paper or other thin material in the way which I have described is, that such sheets can be prepared at a small cost, and thus instruments of the description I have mentioned may be made to perform a large number of pieces without incurring any very serious expense.

Having now described the nature of each of the several parts of my said Invention, and the manner in which it is to be performed, I hereby declare that I claim as of my said Invention,—

Firstly, the mode or modes of producing notes upon wind musical instruments, by means of moveable tubes or plates, having orifices communicating with lateral chambers, in manner herein-before described.

Secondly, the mode or modes of producing various notes on wind musical instruments, by means of a longitudinal valve or longitudinal valves, in manner herein-before described.

Thirdly, the mode or modes of constructing apparatus for preventing the action of some of the keys of musical instruments, in manner herein-before described.

Fourthly, the mode or modes of constructing additional keys or apparatus to be applied to the key boards of musical instruments, so as to enable a performer, by the movement of a single finger, to produce two or more notes at the same time, in manner herein-before described.

And, fifthly, the mode or modes of constructing apparatus for admitting and regulating the admission of air to pipes or other parts of musical instruments, so as to produce the required notes, in manner herein-before described.

In witness whereof, the said Charles Dawson hath hereunto set his hand and seal, this Second day of May, in the year of our Lord One thousand eight hundred and forty-nine.

CHARLES (L.S.) DAWSON.

AND BE IT REMEMBERED, that on the Second day of May, in the year of our Lord 1849, the aforesaid Charles Dawson came before our said Lady the Queen in Her Chancery, and acknowledged the Specification aforesaid, and all and every thing therein contained and specified, in form above written. And also the Specification aforesaid was stamped according to the tenor of the Statute made for that purpose.

Enrolled the Second day of May, in the year of our Lord One thousand eight hundred and forty-nine.

LONDON:

Printed by George Edward Eyre and William Spottiswoode, Printers to the Queen's most Excellent Majesty. 1857.

The trouble with such patentees as Dawson is that they claim and try to cover too much. For instance, in this case Dawson claims a flute, an octave coupler, a key selecting mechanism, and a means for operating an instrument by the use of a perforated music sheet, and all in a single application. Now under the United States patent law he would have to divide his single application into several different cases, and he would have found it necessary to describe more fully and illustrate in greater detail what he is pleased to denominate the fifth part of his invention, which is all that has any bearing upon this issue. Like Morse, Dawson is given to making suggestions, but suggestions are not patentable, only inventions. Morse suggested a perforated board, but did not illustrate it by suitable drawings showing a plan for applying the principle. In like manner, Dawson suggests the idea of two tunes on a single sheet, and the moving of the sheet sideways for the purpose of playing two compositions on a single sheet, the notes of one tune intervening between the notes of the other or for transposing from one key to another. But he does not show nor describe any method whereby this feat was to be accomplished. In like manner, Bain not only suggests, but in a crude way illustrates the very electric system employed by the Welte Mignon Company for recording music by and through the keyboard. It follows, therefore, that Dawson, like his predecessors, has contributed little or nothing to the state of the art, and must, therefore, be eliminated as a factor in the development of the player, and consequently we pass to the next candidates for player fame, Messrs. Hunt and Bradish, of Warren, Ohio, whose patents on a musical instrument are dated January 9, 1849.

Heretofore, the honors of player invention have been divided between England and France, whose inventors have been running a neck-and-neck race in a fruitless effort to discover some practical plan of operating a musical instrument by means of a perforated device. But henceforth they must share the glory with America; not only must they divide the honors with the men of genius of the Western Hemisphere, but they must actually yield the palm and bow to the superior skill and mechanical ingenuity of the United States as illustrated by the modern player piano. There is one thing that has aroused the amazement of the writer, and doubtless has equally surprised the reader of this series of articles, and that is the absence of the Germans as a nation from the list of those who have embarked in the automatic musical instrument development. It had generally been supposed that the Germans were the most progressive people in the world in all things pertaining to music and musical instruments. Certainly that was the writer's opinion, and while this fact may be true even now and under existing conditions as far as musical performance is concerned, yet as inventors of music instruments, and particularly keyboard and automatic musical instruments, Germany lags behind England, France and the United States, while Italy, and even Switzerland, might successfully challenge the prestige of Germany in this department of human activity.

HUNT AND BRADISH, 1849

AT the time this chapter appeared in the MUSICAL COURIER EXTRA, the following specifications were out of print. The Patent Office reprinted them at the requisition of the author:

UNITED STATES PATENT OFFICE.

A. F. Hunt and J. S. Bradish, of Warren, Ohio. Mode of making and playing tunes to produce music. Specification of Letters Patent No. 6,006, dated January 9, 1849.

To all whom it may concern:

Be it known that we, Adoniram F. Hunt and James S. Bradish, of Warren, in the county of Trumbull and State of Ohio, have invented a new and Improved Mode of Making and Playing Tunes to Produce Music; and we do hereby declare that the following is a full, clear, and exact description of the construction and operation of the same, reference being had to the annexed drawings, making a part of this specification, in which—

Draft No. 1 is a perspective view, No. 2 a top view, No. 3 a longitudinal elevation, No. 4, front end view, Section 5 a top view of springs and shaft, No. 8, a perspective view of frame and rollers.

To enable others who are skiled in the art to make and use our invention, we will proceed to describe its construction and operation.

We take a sheet of pasteboard or part of a sheet as the range of the tune may require, this we rule with staff, ledger and measure lines, as shown by the accompanying theorem Draft No. 10. Suppose we wish to make the tune "Auld Lang Syne" as shown by said theorem Draft No. 10. This tune commences on D, therefore we cut a hole through the sheet as shown by the black figures in the same draft. The next three notes come on G. We also cut through as before and so on until we have cut a hole in the place of each note in the tune. You will observe that some of the holes are larger than others, the square ones are accented notes. The manner in which the accent is given will be explained hereafter. In order to explain the manner in which this theorem produces the desired effect we will refer you to the accompanying drafts, No. 1 represents a perspective view of a model of a pianoforte with the keys at one end as shown at C in Drafts 1, 2, 3, and 4, instead of the side as is usual. In every other way it is like a common pianoforte with common action. The improvement we propose attaching so that our theorem tunes will produce the desired effect is first, a frame indicated by I, Draft No. 8 formed by framing together three boards as shown at *a*, *a*. This frame I contains two rollers A and B as shown by section 7. Draft No. 2. The frame with its rollers is slid into the case Y as shown in all the machine drafts. The under roller A has grooves turned in it as shown by its draft.

C represents in each draft a finger key such as is used in all pianofortes with the exception of the little gib or cam D which is fastened in the mortise *c c*. made in the end of the finger key C, section 6, Draft No. 3. This gib or cam D fits in the grooves of the roller A as represented in Drafts 1 and 4. Each key with its gib or cam is pressed down into the grooves of roller A, by means of a smart wire spring above as shown by M, Draft 4. The said springs M are fastened into shaft O as seen in Draft No. 3, and also in Section 5. L represents in the same drafts two strong wire springs which are also fastened to shaft O. The said shaft has a pivot turned on each end as shown by *d d*. Section 5. These pivots fit in holes made in case Y, as shown by *e e*. Draft No. 3. Now we will suppose you strain springs L from *f f* to *g, g*, as shown in Draft No. 3, the tendency would be to turn shaft O, which would cause the spring M, to bear down on finger keys C, as shown in same draft.

The upper roller B is formed by fastening disks or collars on to a shaft of any material to answer the purpose. These disks as shown by V are pressed down on the ridges of the lower roller A by means of springs represented by a pressing on box P, in Drafts 3 and 4. The lower A has a recess, turned in one end as shown at W in drafts Nos. 3 and 8 to admit the pinion *k*, which works in the cogs or teeth S, as shown in Drafts 3 and 4. Now we will suppose you take hold of the crank U and turn in the direction indicated by the arrow in Draft No. 3 and at the same time insert the theorem between the rollers A and B. The rollers A and B being strongly pressed together by the springs *a* pressing on the box P, as seen in Drafts 3 and 4 will draw in the theorem until it comes in contact with the angles of the gibs or cams D, when they will all mount onto the theorem. Now the first hole in the theorem is cut on D, and the gib in key note D will drop in as the theorem is moved on, and tilt up the other end of the key which will force the hammer N (shown in Drafts Nos. 2 and 3) up against the string D, and produce the desired note; so each gib will fall in at its proper time so long as you turn the crank and insert the theorem tunes. R in Drafts Nos. 3 and 8 represents a piece of tin which serves to conduct the theorem back in the direction from which it started so that you can play the same tune over and over, as many times as you choose. The said piece of tin fits in the groove *b b* in frame I, Draft No. 8. Accent is produced by letting the gibs or cams strike deeper; for this purpose the holes are cut larger in the sheets or theorems. These theorems are to be so made that they can be hooked or caught together so as to form an endless band if desired.

J represents in Drafts 1, 2, 3, and 4, a hub through which the pinion shaft passes. This hub is so made that it holds frame I in its place, it can be drawn out of the hole X Draft No. 1 with its pinion as shown in the same draft, if you have occasion to detach frame I. It (the said hub) is to be fastened in its place by means of a pin indicated by *h h* passing into hole, *i i* Draft No. 1.

E represents in each draft a pin plate.

F represents in Drafts Nos. 1, 2, and 3, a common sounding board, G a common bridge, H a common tuning pin board, T the pins.

What we claim as our Invention and desire to secure by Letters Patent is—

1. The making and application of detached sheets, plates or theorems; prepared by perforating, indenting, or otherwise adapting them to operate hammers, weights, keys, valves, levers, wires or springs to produce music or musical tunes, using for the said sheets, plates, or theorems any metal or material which will produce the intended effect.

2. We also claim the right to hook or catch the ends of the said sheets, plates or theorems together so as to form an end-

less band if desired, and the right to use the above described gibs or cams D, springs M and L, movable frame I and rollers A and B, as arranged in the accompanying drawings, the said rollers prepared by grooving or otherwise adapting them to give motion to said sheets, plates or theorems for the purpose of producing music or musical tones by operating hammers, weights, keys, valves, levers, wires or springs.

ADONIRAM F. HUNT.
JAMES S. BRADISH.

Witnesses:
Jno. Clobridge,
Selden Ives.

Patent No. 6006. Improvement in Musical Instrument

The present player industry advanced by stages. In the first period the perforated sheet acted directly as a valve to open and close an opening to the reeds or pipes as illustrated in my patent of December 25, 1883 (Fig. 8). The second stage employed an intervening mechanism between the sheet and the reeds or springs and this system is shown and described in my caveat of 1876, also by Seytre

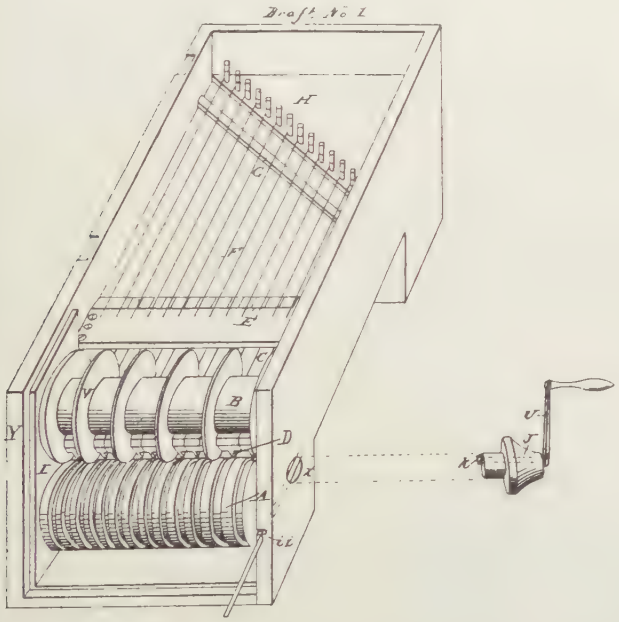

in 1842, and subsequently by Hunt & Bradish in their patent of 1849. The next, or third system, is that of the pneumatic action between the sheet and the tone producing devices; that is, the strings were struck in a piano or the valve opened in an organ by means of wind from the bellows, which covers broadly the present pneumatic principle, and the first to so employ that principle was John McTammany (see caveat above referred to). The reader may think that the Fourneaux device should precede the McTammany system in this connection, but the McTammany invention contemplated a complete instrument of and within itself, just as the Morse, Seytre, Bain, Dawson and Hunt & Bradish devices contemplated a complete and self-contained mechanism, whereas the Pape, Fourneaux, Gally, and other inventions of similar character were not complete instruments in and of themselves, but simply attachments to the keyboard of the piano, and therefore belong to an entirely different class to be treated under a different heading and in another department of this work.

So the subject was dropped by Dawson just as it had been abandoned by his predecessors and the problem lay dormant for another year, when an American patent was issued to Hunt & Bradish of Warren, Ohio, which patent

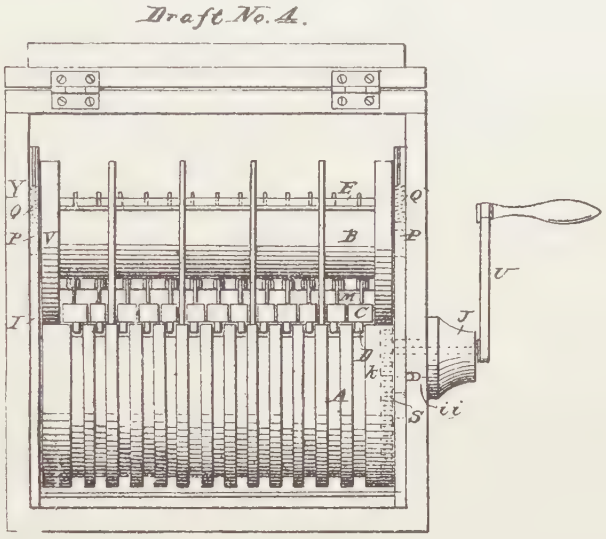

bears date of January 9, 1849. Turning to my United States patent records, I find an elaborate set of drawings covering three sheets, but no specification in relation to the Hunt & Bradish patent, but on the margin of one of the sheets of drawings, I do find the following statement, stamped in red ink by the Patent Office:

"The specification in this patent is not in print."

But as a result of further research in the files of the

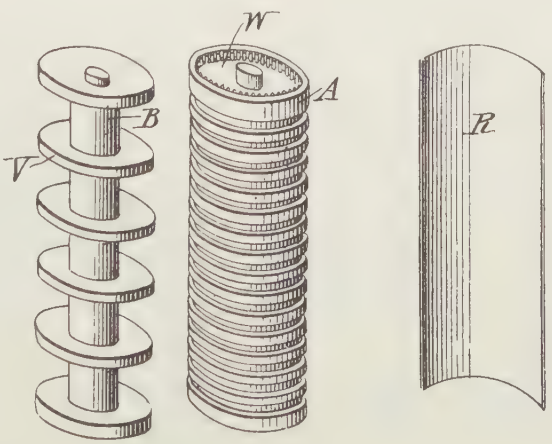

New York Public Library I found the following bearing upon the subject in the Patent Office report of 1849:

HUNT AND BRADISH SPECIFICATION.

No. 6006.—Improvement in Musical Instruments.

What we claim as our invention and desire to secure by letters patent, is the making and application of detached sheets, plates, or theorems, prepared by perforating, indenting, or otherwise adapting them to operate hammers, weights, keys, valves, levers, wires, or springs, to produce music or

musical tones, using for the said sheets, plates, or theorems, any metal or material which will produce the intended effect. We also claim the right to hook or catch the ends of the said sheets, plates, or theorems together, so as to form an endless band if desired; and the right to use the above described gibs or cams D, springs M and L, movable frame I, and rollers A and B, as arranged in the accompanying drawings; the said rollers prepared by grooving or otherwise adapting them to give motion to said sheets, plates, or theorems,

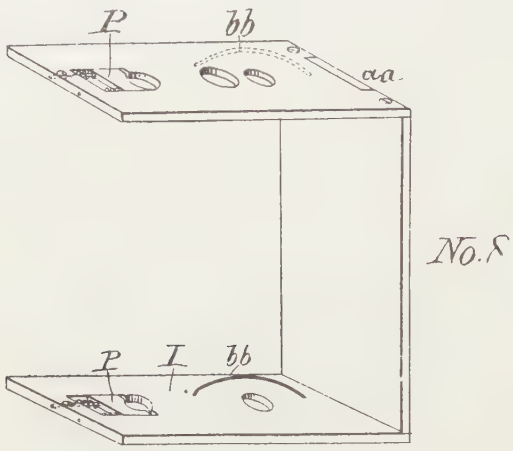

for the purpose of producing music or musical tones by operating hammers, weights, keys, valves, levers, wires or springs.

ADONIRAM F. HUNT.
JAMES S. BRADISH.

I cannot reconcile myself to the belief that the foregoing brief and unsatisfactory statement is all there is by way of a specification in this case, so it means an additional trip to Washington to make certain the issue, one way or another. While this patent, like those that have preceded it, has little, if any bearing upon the player issue, yet it is a link in the chain, a step in the evolutionary process, and is therefore important, and it would seem that with nearly $8,000,000 in the Patent Office treasury unjustly extracted from the pockets of the inventors of the land that the Government might at least keep its records complete. But it does not, nor anywhere near it. The drawings in this case are comprehensive and complete and the details of the invention are brought out in such a manner as to enable one skilled in the art to reproduce the invention, although the absence of an intelligent specification is, of course, a serious drawback.
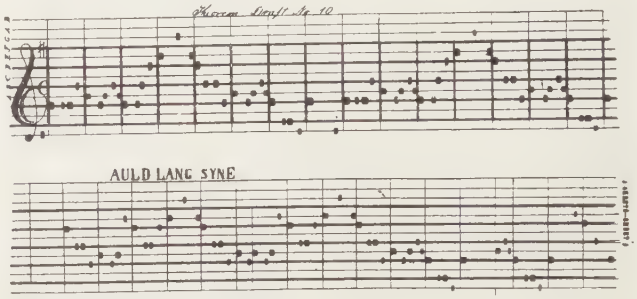
The thing shown is a model with a range or capacity of one octave, and the whole seems to comply with the law and the rules of practice within the Patent Office. Further-

Draft No. 3.

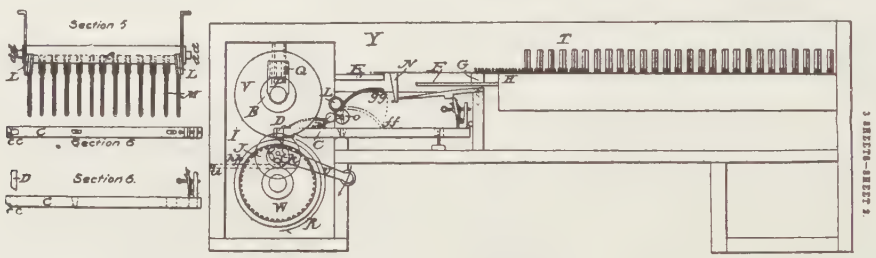

Draft No. 2.

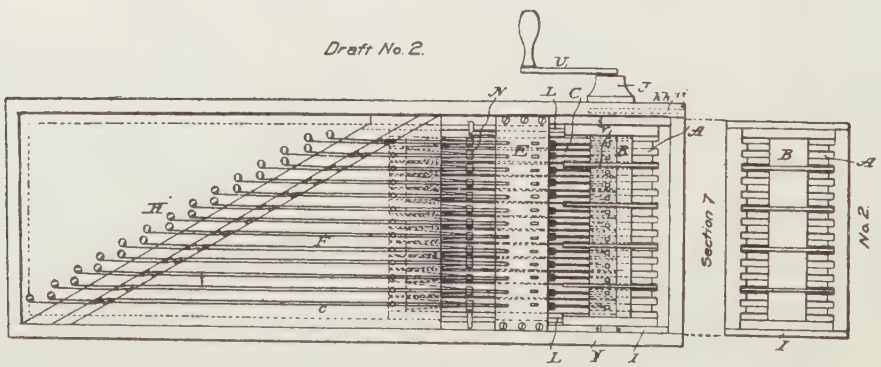

more, the law of 1849 required the delivery of a model. The presumption is, therefore, that Hunt & Bradish actually built a model of their invention. Whether their predecessors in Europe did or did not do so is not disclosed by the records. So the question that arises in this connection is what elements are shown or described in the Hunt & Bradish patent which are incorporated within the modern player and which are neither shown nor described in the patents previously discussed.

To begin with, there is the sheet and means for feeding the same; an action governed by the sheet; a series of

strings or tone producers, and a series of fingers or followers adapted to rest upon the sheet and register with the perforations therein, or in other words, an intervening mechanism between the perforated sheet and the sounding devices or strings, substantially as shown and described by Seytre. But the drawings clearly indicate that the perforated music sheet would have to be equal to the length of a keyboard in an 88-note instrument, which makes the proposition impracticable.

The number of elements embodied in this invention and which are common to the player are three: the sheet, means for feeding the same, and the strings—three elements—just the same number we had before, though the elements differ, also the construction and operation is different, and the reason for this difference in the number of elements is that the rolls shown in the Seytre differ in their function from the rolls employed by Hunt & Bradish, so we have made no gain in the embodied number of player elements. Could all of these elements be comprised in one invention, then some headway could be shown, but some elements are left out and others introduced in their stead; nevertheless, the invention illustrates a principle that was in general use by automatic musical instrument manufactured in the early history of the player industry, when the instrument was more of an infant than it is today, and thousands of instruments, with such finger mechanism, were manufactured and sold, and this fact is evidenced by the Fourneaux, McTammany, Van Dusen, Fowler, Gally and a hundred other inventors I could mention who were employed in developing substantially the same system, a plan that was only endured because the state of the arts at that time made the present system impossible.

THE PAPE PATENT ISSUED 1851

WHEN the average man has become convinced in his own mind that he has found a good thing, whether it is a gold mine, an heiress, or a rich relative, he is inclined to hold onto it, and it is equally so with the man who thinks he has discovered a valuable invention. He is prone to cling to it, and to take out one patent after the other, each patent going to demonstrate the fact that he believes in his discovery and is willing to spend and be spent in order to perfect it, and that he proposes to prosecute it to the end. Hence the numerous patent applications of the writer, Needham, Gally, Matthews, and a score of others that could be mentioned, who believe in the future and ultimate success of the player.

But neither Morse, Seytre, Bain, Dawson, Pape, Fourneaux or Hunt & Bradish ever took out the second patent or in any way attempted to further prosecute or develop the various crude, impracticable things shown, described and claimed by them, from which we must conclude, therefore, that these men lacked faith either in the practicability of the inventions or in their ability to develop the idea to a practical point.

One thing we know now is that the idea was feasible and all that was necessary was to fully develop it and that fame and fortune were in store for the one who should persevere to the end.

It has not been shown, and I doubt if it can be shown, that Seytre derived any benefit from the Morse prophecy or that Bain was in any way indebted to those who preceded him, or that any one of them, except Fourneaux, was entitled to any credit for the development of the player, as not one of them ever completed a practical instrument, and that the first and only thing known to produce a musical result was the Fourneaux idea, whose patent was issued in 1863, although it was not until years after that Thibouville Lamy improved upon Fourneaux's device and put it on the market in a small way. It will be observed that this patent does not contemplate a complete musical instrument, but simply an attachment to be used in connection with the keyboard of a piano or organ, whereas, all the patents, preceding it, contemplated self-contained musical instruments; that is, they contained all the elements and exercised all the functions necessary to produce music, by means of a perforated sheet. Hence the distinction I have drawn between them, when I call the keyboard attachment a contrivance or device, while I designate the other class under the caption of musical instruments. It will be observed, in consequence, that we are dealing with two classes of inventions, instruments and attachments for musical instruments.

The Pape patent is open to the same criticism as its predecessors; that is, it covers too much. The patentee not only claims it in connection with musical instruments, but looms also, an entirely distinct and separate class of invention. Now such claims may have been permissible in France in 1851, but they are not now.

Special attention is directed to the fact that in the Seytre and Hunt & Bradish inventions no attempt is made to remove the strain or wear and tear of the fingers that normally rest upon the sheet, which is a great defect, and serious objection to the principle comprised in the Seytre and Hunt & Bradish inventions. Pape evidently recognized the necessity of removing the strain of the fingers from the sheet, and took at least partial measure to overcome this objection, as evidenced by the function of the bell crank lever—e. g., the downward arm H, which rests upon a key of the keyboard. Now to depress a piano or organ key directly by means of the perforation in the sheet has never been practical. But in the Pape system, which was never considered feasible and never reduced to practice, yet it embodied the principle, the use of which made other musical instrument inventions of this class not only possible but practicable.

In the Pape invention, the pins C. C. protrude through the perforation in the sheet and engage the horizontal arm F, depressing the keys on the piano, the only strain on the sheet being the depression of the delicate springs D. D. Another feature of the Pape invention is the tapering points of the pins C. C., whose travel was regulated by the size of the perforation in the sheet. If the perforation was small the pin protruded but a short distance, but if the hole was large it extended forward proportionately and took a greater hold on the lever F. G., depressing the keys proportionately, thereby making it possible to strike one key hard and the other soft according to the size of the hole, a proposition that is at the present time deeply engrossing the attention of experts and the accomplishment of which seems to be all that stands in the way of the ultimate perfection of the player.

Nor need our modern experimenters feel puffed up about their player knowledge and lay the flattering unction to their souls that they are not like other men, that they know more, for as a matter of fact the early experimenters recognized

every problem involved in the development of the player, and actually took steps to overcome them. But the state of the collateral arts was against them and retarded and obstructed their progress.

SPECIFICATION OF M. PAPE.

7,649—French Patent for an invention of fifteen years, under date of October 6, 1851. To M. Pape, of London.

Concerning a new system of a cylinder with moving points applicable to various industries and more especially to organs, mechanical pianos, Jacquard looms, etc.

The essential principle of the invention consists in the use of points which lodged in holes, spaced regularly and conveniently, are constantly impelled to go out of these holes, because of certain springs. But some of them are held back against said springs by the application on the imperforated surface of a sheet of paper, metal or other convenient material, whereas other points can pass through certain holes made in the sheet and which occasionally are spread over the holes in which are placed the points which are to act at a desired moment.

Although by this principle, these conditions can be applied to plain surfaces, I have given preference to the use

Fig 2

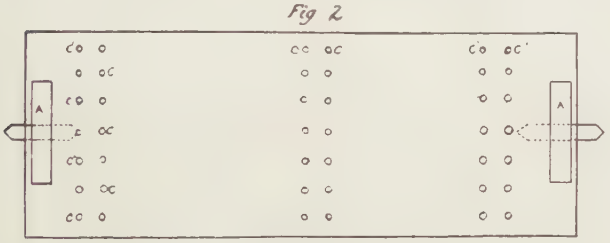

of a cylinder against which the metallic or paper sheet is forced to apply itself as it is unfolded at the rate that the rotating cylinder is turned.

It is plain that, if this sheet is perforated at certain points by holes, which come to spread themselves over certain holes of the cylinder, the pins set in these holes can spring out, and cause the opening of certain valves of an organ or the striking of certain hammers of the piano, or lastly, strike against certain parts of a Jacquard loom to determine the lifting of certain threads of the chain. Thus the arrangement adapted in the placing of the holes in the metallic or paper sheet can be such that it will produce a piece of music if applied to an organ or piano, or else a design on the fabric if applied to a Jacquard loom.

Fig. 3.

The following shows under what form I have applied this principle in its application to the organ and piano.

Figure 1 represents a section of the apparatus; figure 2 represents a longitudinal view of the cylinder; "A" is a cylinder of wood or other material pierced with holes, spaced regularly and equally from each other. The holes placed on the same circumference belong to the same note.

"B" is a cylinder of thin metal enveloping the cylinder A. The holes in the cylinder B are smaller than those of the cylinder A.

CC are pins set in the holes of the two cylinders. They are shouldered in a way that they can spring out of B only a predetermined length. The portion which comes out is conical, the inside portion is cylindrical.

D is a very weak coiled spring which constantly tends to thrust out the pins.

Fig 1.

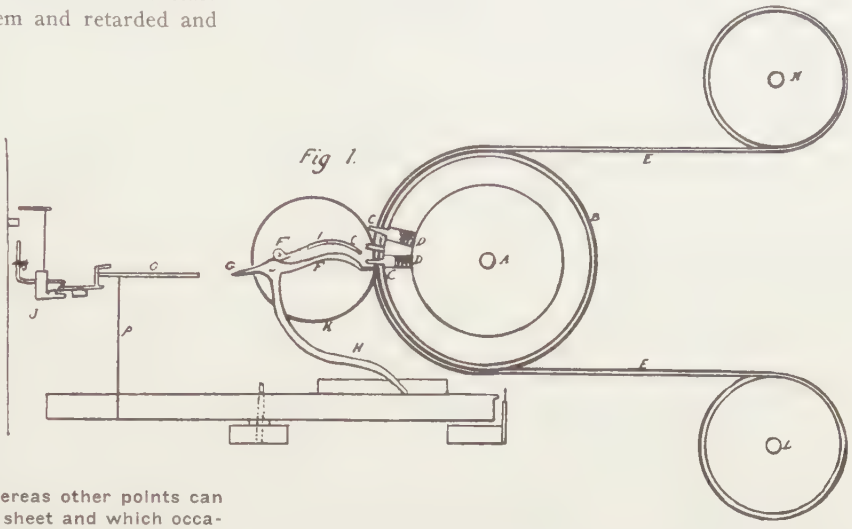

E is a sheet of paper, metal or any other proper material wrapped about the cylinder M, successively applying itself to a portion of the circumference of the cylinder B, then wrapping itself about the cylinder L. This sheet is perforated at proper points by holes in the rotation of the cylinder, come into successive coincidence with certain holes of the cylinder B to allow the pins set in these holes to spring out, while the others are held back by the unpierced sections of the sheet E. If the holes made in the sheet E have varying diameters, differences in the projecting of the points, which pass through these holes will result, because of the conical shape of the pins, and they will advance further in the large holes than in the smaller ones, a condition which permits shading the sound obtained as will be seen further on.

KK are wood and metal disks covered with India rubber bearing on the ends of the cylinder B and which in rotating engage it with the sheet E, which unwinds itself from the

Fig. 4.

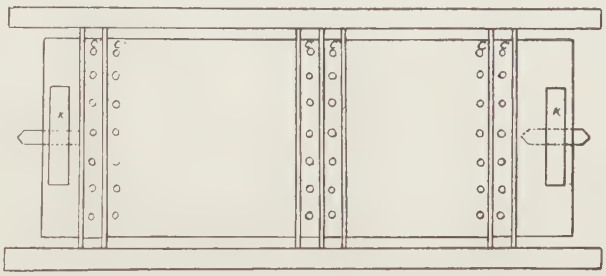

cylinder M to wrap itself about the cylinder L, caused to turn either by an interior spring or by a weight or by a handle, which should be able to impart movement to the whole system, but as a diameter of the cylinder varies proportionately to the wrapping of the sheet E, I have preferred in order to obtain a more uniform motion to apply the motive power, be it handle, weight or spring, to one of the disks K which entrains the entire system.

FG is a lever having its axis of movement at F'. Every note of the instrument requires a similar lever, whenever point C of the cylinder B encounters the arm F of the lever. This arm is depressed, the arm G is elevated and through the agency of the rocking levers represented in the design, levers whose use is common in the mechanism of pianos. The hammer T is moved away from the spring stretching the string J which just as soon as the pin C lets go of the lever, hurls the hammer against the spring with a force proportional to the tension it has received. This tension has been

as much larger as the point C has encountered a larger hole in the sheet E, and has been able to project further out of this hole, and on the other hand, this tension will have been as much quicker as the hole through which the pin has passed, will have been smaller, a condition which as I have mentioned above, permits all the shading of expression in the rendering of music.

Between all the circumferences of pin C on the cylinder B is another circumference of points C′, designed to strike occasionally the spring I fixed to the lever F and sufficiently strong so that whenever a pin C′ rests on it, something which does not happen until the arm F is already depressed and about to escape, keeps the damper lifted in order to prolong the sound as long as desired.

The same result can be obtained by striking the keyboard by means of another of the levers and placing on the key a rod P whose elevating agitates the system of rocking levers under the conditions previously described. But the use of this arm H applies more particularly to the organ, the valves of which must be lifted by a direct action on the keyboard, which the pin C′ can maintain depressed by means of the spring I whenever it is a question of prolonging the sound. If it is decided to use paper exclusively its bearing may be rendered more exact and complete on the cylinder B by means of the arrangements represented in figure 2′ and which consists of a small frame placed in front of the cylinder and divided likewise by straight strips of steel placed at certain distances between the pins and which bearing as a spring against the paper applies it more exactly to the cylinder. Finally and in order that the holes in the same paper shall not grow larger under the straining of the pins, I settle these in the condition shown in figure 3.

"a" is a metal tube set in the hole of the cylinder A. A longitudinal groove occupies part of its length and one side of this groove has three notches one above the other marked 1, 2, 3 or more.

"b" is the pin having a small stop "d" set into the longitudinal groove. It is urged out of the tube by the very slender spring "c."

A small flat place is made on the conical portion of the point in such a position in relation to the stop "d" that when this flat spot encounters obliquely the arm F of the lever, the point is made to turn about itself and its stop occupies that notch which corresponds to the size of the hole through which the point is working. Thus these results for that point are a complete firmness and the effort instead of being directed against the paper, is directed only against the stop, and the sides of the notch.

Other arrangements can permit the shading of musical expression and to realize the principle which consists essentially of placing above every key a certain number of mechanism designed to exercise on it a different effort. These mechanisms can be weights, rods furnished with springs, held at a distance from the key, each one by a trigger, each trigger presents a projection different from the others in such a way that whenever a pin C rises out of the cylinder, the least amount, it strikes a single trigger which, leaving the mechanism of which it is strung, determines the feeblest tone. If the point projects further from the cylinder it strikes 2, 3 or 4 triggers at a time and accordingly produces a sound double, triple or quadruple in its energy. The pin C′ must as their duty act on the triggers in such a manner that the mechanism they have let escape under the action of the pins C are brought back to them.

THE McTAMMANY PATENTS

IN entering upon my own (McTammany) case, undoubtedly the pioneer in the manufacture of perforated music and instruments as illustrated by the modern player piano, I do so with the firm determination of demonstrating beyond a doubt my claims to the honor and credit, not only of inventing the player mechanism, but what is more that I am the father of the player industry as well, having been the first to invent, exhibit, manufacture and offer for sale instruments operated by a perforated music roll. It is true that attempts had been made to disprove the foregoing claims, and reference has been made to the Morse, Seytre, Bain, Dawson and Hunt & Braddish patents, but now that these experiments have been dragged forth to the light of day the reader can judge for himself of the merits of the respective devices, and the justice of my claim.

There is no evidence in existence and never has been to prove that any one of the foregoing parties ever constructed an instrument that was operable with a perforated sheet and the most that can be claimed for them is that they were abandoned inventions, assuming that they had existed. And that is the view that the courts have always taken in dealing with them, as witness the following eloquent observation of Justice Blatchford in Hitchcock versus Tremaine, 5 Fisher, 539:

This is one of those cases so often met with in the history of patents, where the invention, once perfected, has shown itself to be useful and so highly appreciated as to have gone at once into so extensive use that it is inherently impossible it should have been known before and not have gone into general use. Its success leads infringers and rival inventors to set up crude and unsuccessful experiments as anticipating it and dim recollections are stimulated, and conscience strained, to clothe with living flesh what was an inert and useless skeleton.

Watt's claim to the inventorship of the steam engine was questioned; Stevenson's title to the locomotive, also. And it is a matter of common knowledge that the right of Fulton to the honor of having invented the steamboat was also denied. Howe's claim to the sewing machine was ignored, also McCormick's title to the reaper and that of Sholes to the typewriter. All of them have been challenged at one time or another and the player piano has been no exception to the rule. But the fact remains that the first perforated paper musical instrument ever invented was constructed by John McTammany and publicly exhibited by him in St. Louis in the spring of 1876, and in support of this statement I submit the following article from the St. Louis Sunday Journal of July 9, 1876:

In this age of wonders, people have come to look composedly upon anything supposed impossible. But now comes a stunner, an eye opener in music, and is nothing more nor less than an organ, a common reed organ, on which one who has never played an organ, nor ever learned the difference between a gammut and a cleft, who even is not sharp enough to know a flat or is too flat to know a sharp, but who can work pedals, can play any tune. This organ is the product, not only of extraordinary genius, but of 10 long years of study and experiment on the part of the inventor, John McTammany, of New York. Not only can any tune be played by simply blowing the bellows, but by the moving of a slide a piece may be transposed to sharps or flats at pleasure, while any kind of time or key may be arranged for the organ. Although attached to the organ it does not use any of the reeds or keys, consequently an accompaniment can be played to the music of the automatic organ. This organ is so constructed as to attach to the common organ in most cases without changing the style of case. The inventor, Mr. McTammany, is a young man, by occupation a music teacher, from Akron, Ohio. He came to this city some months since, to secure the aid of organ manufacturers in perfecting the organ, and through Messrs. Story & Camp, who are the agents of the Estey organ, the manufacturers of that organ furnished Mr. McTammany with means to perfect the model, and so satisfactory are its workings that the company has ordered an organ at once for the Centennial. The Automatic is at the rooms of Messrs. Story & Camp, 914 Olive street. We have seen the organ and heard it play and can see no reason why the success of this wonderful invention is not certain. The advantages accruing are patent at a glance, putting music in to every home without the tedium and expense of learning to play, and Messrs. J. Estey & Co. have shown keen foresight in securing it for their celebrated organs.

I have now reached the spring of 1876, the year in which I constructed three players, two of which were publicly exhibited as indicated by the foregoing article. And now the question arises in what way and to what extent the player referred to and on which I applied for a caveat resembled the modern player, and what elements it contained, the absence of which from the present player would make it either unsaleable or undesirable. This leads up to the question of what is meant by the term "player," and in reply I submit the following definition, which has been generally accepted by the trade:

"Player," a musical instrument consisting of a casing, two actions and a series of sounding devices within the casing, one of said actions adapted to be operated manually, the other designed to be operated mechanically by means of a perforated sheet on rolls; a wind or spring motor for feeding the

sheet and winding the rolls; a bellows and mechanism put in motion by it for actuating the sounding devices of the automatic action, foot pedals or power for driving the motor, and means for controlling the tempo, varying the expression and transposing from one key to another; the action of the automatic being pneumatic.

The Elements of a Player

From the foregoing definition it will be seen that the player consists of not less than fourteen elements. It may have more, but it cannot well have less and the next question is who was the first to embody in a practical working instrument, the necessary number of elements characteristic of the modern player.

The newspaper account states that the McTammany player mechanism was embodied in an Estey organ. That implies that the first player was a reed instrument as were all the players built in the early history of the industry. From the newspaper account we must further assume that

Fig. 1.

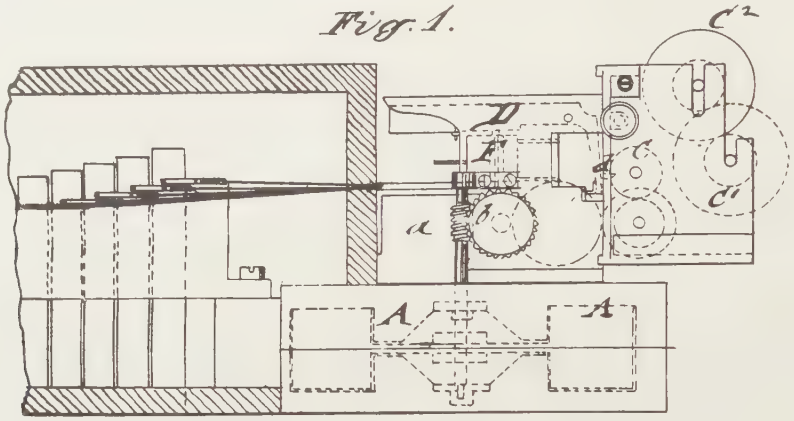

Fig. 2.

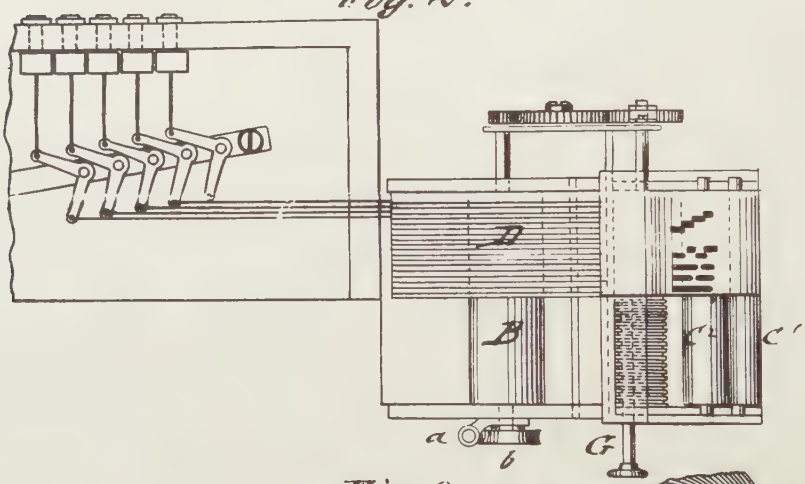

Fig. 3.

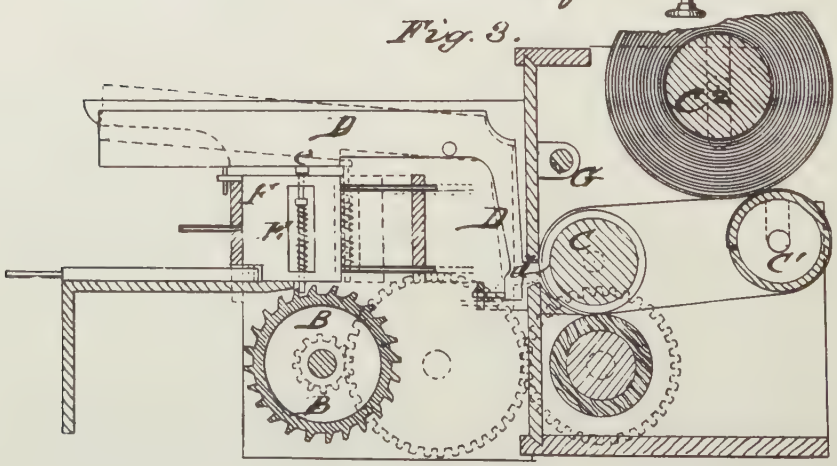

THE McTAMMANY PATENT, APPLICATION FILED, SEPTEMBER 6, 1876.

it was a standard Estey organ and if so it must have contained the following elements common to all reed organs built at the time under consideration—a case, an action, bellows, keyboard, sound producing devices or reeds, foot pedals and a knee swell or means for varying the expression a total of seven elements. In introducing the player mechanism within the organ I added the following additional elements, namely, an elongated perforated sheet on rolls and means for feeding the sheet and winding and rewinding the same; a wind or spring motor for winding and rewinding the sheet, a pneumatic action actuated by wind from the bellows for opening and closing the valves to vibrate the sounding devices or reads, and mechanism for adjusting the sheet to register with the perforations therein, and means for regulating the tempo or a total of at least seven elements in the player mechanism, making not less than fourteen elements altogether, and while additional elements have been added to the player since the date under consideration, some of which have been good, some bad and some indifferent, yet the least number of elements that you can employ in a practical and desirable player is fourteen, all of which were employed by me in the construction of my player of 1876 referred to by the St. Louis Journal.

I have now completed the whole list of patents issued prior to the date, set up by me, which is 1866, as witness the following from the records on file in the United States Patent Office:

"Before the commissioner of patents in the matter of interference between the application of John McTammany, Jr., and the patents of Elias P. Needham, Henry B. Horton, Mason J. Mathews, Newman R. Marshman and others, for automatic musical instruments. Int. by Fred Curtis, counsel for J. McTammany. Deposition of John McTammany, Jr.

Int. 1: State your name, age, residence and occupation.

Answer: John McTammany, Jr., 34, residence Cambridge, Mass., and by occupation an organ manufacturer.

Int. 2: Do you claim to be the inventor of the following improvements now in controversy, namely, first, the combination with the reeds and bellows and perforated sheet of a pedal and mechanism put in motion by it. Second, the combination with a wind instrument operated by a perforated endless sheet of a feed roller hinged to an adjacent part of the instrument, and adapted to facilitate the application or removal of the music sheet?

Int. 3: In a reed instrument the combination with the perforated music sheet or register, the reeds, reed cells and bellows of a mechanism operated by a foot pedal to open and close the said cells, and enable the apertures to govern the said opening and closing; that is, to connect such mechanism with the valves of the reed cells.

Int. 4: In an automatic musical instrument adapted to be governed by a perforated music sheet of a pair of rolls adapted to wind and serving an elongated music sheet?

Answer: I do.

Int. 5: Please state the manner in which you were led to make the invention, steps you took for making models or instruments, etc., giving dates and names.

Answer: In the year 1866 I conducted a number of experiments embodying to some extent the principles involved in the present controversy. During 1867, 1868 and 1870 I made additional experiments and finally a complete instrument within the year 1870. That instrument was seen by the Rev. M. A. Miller and family, of Carrollton, O., for whose church I was organist."

Of course, the foregoing testimony had to be sustained by competent witnesses and exhibits and was so supported and to the complete satisfaction of commissioner of patents. All the claims were decided in my favor in one of the fiercest contests ever waged in the patent office, the case having been three times appealed, and said claims were subsequently issued to me in a patent which bears date of Dec. 25, 1883.

Not only did I win from Needham and Horton the claims referred to, but in a subsequent series of interferences between Mason J. Mathews and Newman R. Marshman and others I was declared to be the first to embody in an automatic musical instrument a perforated music sheet on rolls and adapted to wind and rewind as at present employed in the player, and at the same time the fact was brought out before the commissioners that the wind and spring motors for feeding and winding the sheet by and through the foot pedals were also my invention. In further support of the foregoing if such is necessary there is on file in the United States Patent Office the Affidavit of Alpheous Lowmiller, of Germano, Ohio, to the effect that I disclosed to him the principle of the player as early as 1868, and finally there is the newspaper controversy between Lowmiller and myself, published in the Steubenville (Ohio) Gazette and Carroll County Chronicle in the summer of 1871, all of which went to support my claims upon which the commissioner of patents ultimately rendered his decision in my favor, as witness the following:

DECISION OF COMMISSIONER.

"A fair reading of the testimony submitted on behalf of McTammany satisfies me that the inventions in controversy were conceived by him in the later part of the year 1876. Whether the machine was or was not a full reduction to practice is a question not material to my finding here.

"Clearly this machine was sufficient to evidence a full conception of the inventions and an attempt to embody the same in practical form. However, as but evidence of conception, it is necessary for the applicant to go a step further and show that he used reasonable diligence in the reduction of the invention to practice. This I think he has done. During the interval between 1866 and 1877 he was using every effort consistent with his circumstances to perfect and to secure the adoption by others of his improvements in this class of invention.

"I cannot, therefore, regard the early efforts of the applicant as abandoned experiments. His diligence was such, in my judgment, as to enable him to carry back his invention to the time of its conception (1866), and thus to antedate the invention of his opponents. I must hold, therefore, that McTammany has, by proof sufficient to defeat the patents of his adversaries shown himself entitled to a patent. The concurrent decisions of the examiners of interferences and the board of examiners-in-chief awarding priority of invention to McTammany are accordingly affirmed."

Year of Conception

In view of the foregoing facts it must be evident that I follow Hunt & Bradish in regular chronological order, there-by antedating Van Dusen, whose patent bears date of Dec. 10, 1867, and having established the date of my conception of the invention as 1866, it was encumbent upon me to go a step further and show that between the date of filing my caveat in 1876 and the date of my conception that I had used reasonable diligence in the further development of the invention. This I did and to the complete satisfaction of the commissioner of patents, as witness the following:

"I cannot concur with the statement of counsel for Needham that in order to defeat an applicant he must show that

he conceived the invention and reduced the same to practice before the time at which such invention was conceived by the patentee.

"On the contrary, the statute expressly provides that it is sufficient to defeat the rights of a patentee to show 'that he had surreptiously or unjustly obtained the patent for that which was in fact invented by another who was using reasonable diligence in adapting and perfecting the same.'"—Decision of Commissioner awarding priority to McTammany.

There were many interferences declared between myself and others and numerous decisions renderd in my favor, but the testimony is voluminous and fills many volumes, while the decisions are too lengthy to embody complete in this work, but all may be found on record in the U. S. Patent Office.

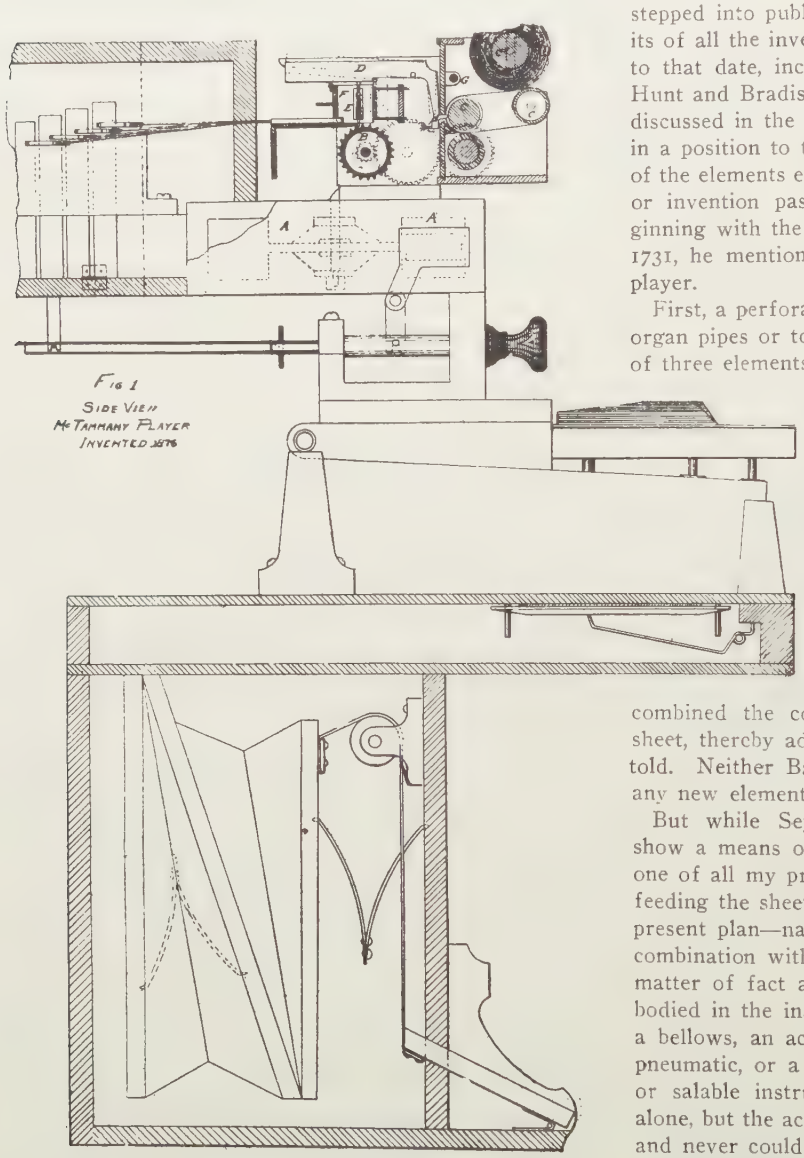

Fig 1
Side View
McTammany Player
Invented 1876

Having thus gone over all the patents issued, and examined every invention bearing upon the subject prior to 1876, the date of my exhibition of the player, it was found that not more than four player elements are embodied in any one of them and not more than six in all of them combined; nor could the elements enumerated be utilized or applied to the player without being completely reconstructed, and differently applied; for instance, one of the elements credited to Seytre was the rolls, but the rolls employed by Seytre were used for an entirely different purpose than they are used in the present player. The same is true of the rolls shown by Bain and Van Dusen also. But the rolls shown and described by the latter inventors could not be utilized and never were utilized in connection with the modern player.

Having now reached the year 1876, the period when I stepped into public view and having passed upon the merits of all the inventions foreign and domestic on record up to that date, including the Morse, Seytre, Bain, Dawson, Hunt and Bradish and Van Dusen, all of which have been discussed in the preceding pages of this work we are now in a position to tabulate exactly the number and character of the elements embodied not only in each individual patent or invention passed upon, but to summarize them. Beginning with the English patent of Justinian Morse, dated 1731, he mentions three elements common to the modern player.

First, a perforated device or piece of "wainscot"; second, organ pipes or tone producers; third, a bellows, or a total of three elements; but how these elements were to be utilized or combined is neither shown nor described and therefore makes his patent unintelligible and worthless.

The next attempt was made by M. Seytre, of France, whose patent bears date of 1842 and who introduced a flexible perforated sheet in lieu of Morse's wainscot, also a means for feeding the same, together with an action making two additional elements or a total of five.

After Seytre comes Van Dusen, who combined the collapsible pneumatic with the perforated sheet, thereby adding another element, or six elements all told. Neither Bain, Dawson, nor Hunt & Bradish added any new elements to those already mentioned.

But while Seytre, Hunt & Bradish and Van Dusen show a means of feeding or advancing the sheet, yet not one of all my predecessors showed a practical method for feeding the sheet, and it remained for me to introduce the present plan—namely, the winding and unwinding rolls in combination with an elongated music sheet. So that as a matter of fact all the player elements that had been embodied in the instrument by my predecessors was a sheet, a bellows, an action, sounding devices and the collapsible pneumatic, or a total of five elements; and no practicable or salable instrument could be made by those elements alone, but the action credited to my predecessors never was and never could have been utilized in connection with the modern player.

Now in order to construct a full fledged player it was necessary to introduce several additional elements. For instance:

An elongated sheet.
Winding and unwinding rolls.
Mechanism for actuating the rolls.

A wind or spring motor. (I invented both.)
Foot pedals and mechanism put in motion by it.
A pneumatic action actuated by wind from the bellows.
A casing.
A keyboard.
Means for regulating and adjusting the sheet to register with the windways of the tracker bar.
And means for regulating the tempo.

Or a total of twelve elements in use in the modern player and all of which were first introduced by me, and when you come to subtract from the modern player all of the foregoing elements you would not have much of a player left.

Of course, the player invented by me in 1876 was a very crude affair compared with the player of the present day, just as Stevenson's locomotive was a pretty shabby looking piece of machinery when it came from the hands of Stevenson in 1829, and when contrasted with the locomotive of the present time. But no locomotive can be built at the present day that does not embody those essential principles first comprised in a locomotive by Stevenson, as far back as 1829, and by the same token no player can be built today that does not embody the principles first employed by me in my player of 1876. And, so far from claiming all the glory due the industry, I wish here and now to recognize and tender my sincere thanks to each and every man who has contributed in any way to the development and promotion of the player, and there are hundreds of them, not only in this country but in Europe, just as there were hundreds of men who helped to improve the manual piano invented by Cristofori. Such men as Silberman, Erard, Broadwood, Babcock, Hawkins, Chickering and others whom I can name. But the fundamental principles of the manual piano were first embodied in an operative instrument, in 1707, by Cristofori, of Padua, and my relation to the player differs in no essential respect from Cristofori's part in the development of the conventional piano.

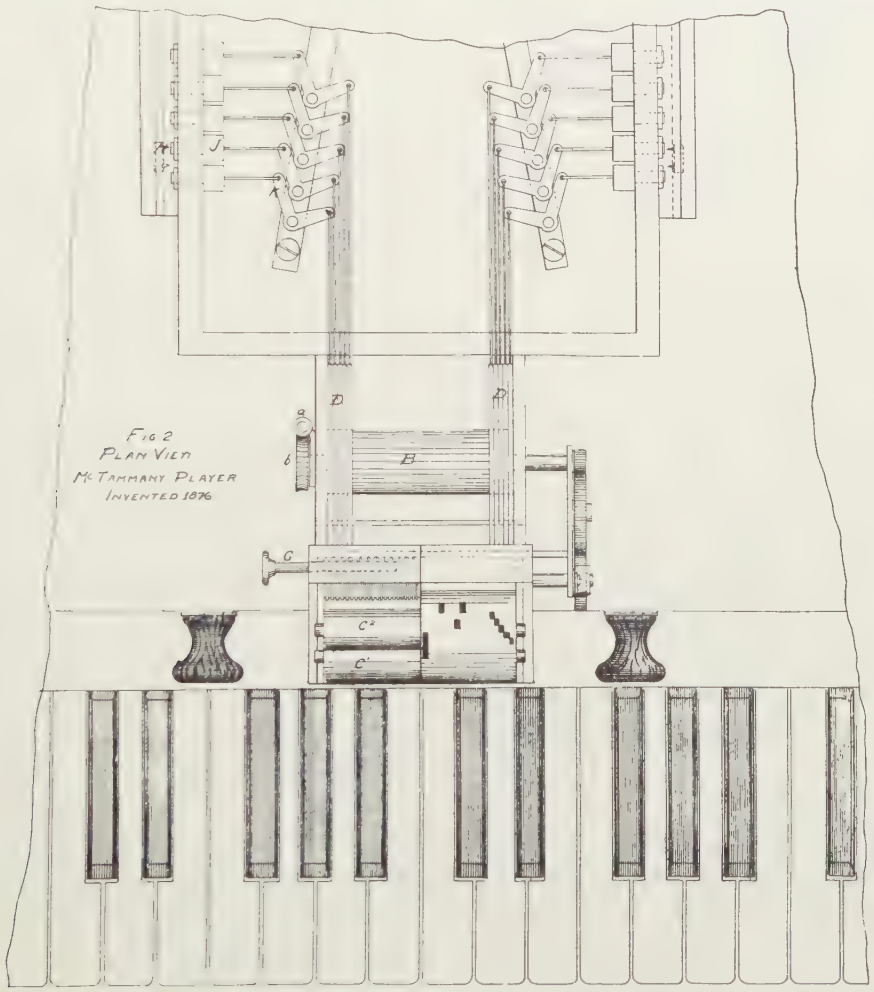

It is true that others before my time had tried to construct instruments that could be operated by perforated devices of one kind or another, and one man had invented an attachment which, when applied to the keyboard of a piano, would play. Some of the attachments were actually made and sold, and one of them was exhibited at the Centennial Exposition in Philadelphia in the fall of 1876. But

that was not a player, or a musical instrument, in the common acceptation of the term. It did not contain within its own case sounding devices, but was simply a mechanical attachment to be applied to a musical instrument. But that device is obsolete today, while the McTammany system is the recognized method of the trade at the present time.

Prior to 1876 no instrument had ever been constructed, either in this country or in Europe, embodying the essential elements described in the definition referred to, and had I gone to the Patent Office at that time I could have got a patent so broad and comprehensive that no player could have been built without infringing my claims. Why, then, didn't I got to the Patent Office? The reader may inquire. In reply I desire to cite to him the following document:

"Office of the Scientific American,
"Patent Office Department, No. 37 Park Row,
"New York, May 8, 1876.

"J. McTammany, Jr., St. Louis, Mo.:

"Dear Sir—Your favor of the 5th inst. to hand. Your improvement we think can probably be patented. When you

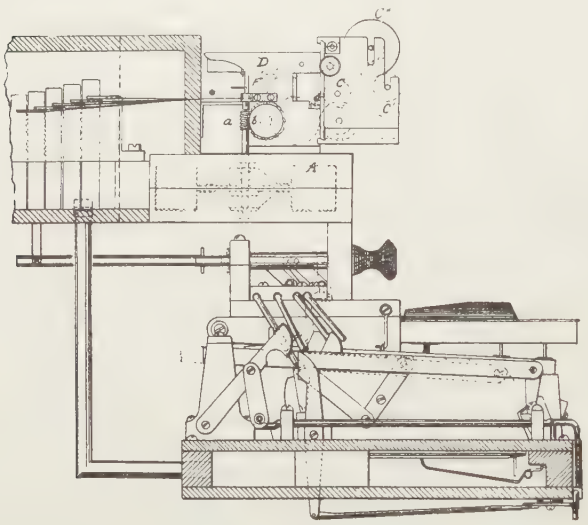

DIAGRAM OF McTAMMANY PLAYER, 1876.

desire to proceed, please send us a model and fifteen dollars on account by postal order or draft. Also give us any further ideas concerning the working and merits of the improvement that may occur to you. We will then prepare the necessary drawings and specifications and send you the latter for examination and signature.

"Sincerely yours,

"MUNN & CO."

Now, as a matter of fact, I was penniless at the time. When I entered St. Louis, in the winter of 1875, I had saved up some money but not exceeding $500, and I had built three models of the player, together with two machines for preparing the sheets. The first model was small, the second somewhat improved and on more pretentious lines, and finally, the last one—the one described in the St. Louis Sunday Journal, and which was designed for exhibition at the Centennial at Philadelphia—but by the time it was finished I had pawned everything I could raise a dollar on and was several hundred dollars in debt. But I was neither discouraged no unhappy. I had accomplished my purpose and vindicated my judgment, and as I sat in my shabby little room, in that old ramshackle of a building on Fourth street, known as the Western Hotel, reading the description of the player in the Sunday papers I was supremely happy, although in debt for my room, without a cent in my pockets, not even a change of linen, having had to borrow the money to pay for a copy of the Sunday paper which contained the first printed statement of my ten years' trials and tribulation in the development of the player mechanism.

By reading the newspaper description it will be found that the player mechanism was applied as an attachment to the Estey organ, as I was unable to purchase an organ to which to apply my mechanism. And that very fact was a serious handicap to me, as it was understood that I was not to mutilate the instrument in conducting my experiments, for by making some slight changes and alterations in the organ I could have lessened the expense and made much more satisfactory the musical results.

But while, broadly speaking, the action of my player was pneumatic, yet it did not contain an individual pneumatic for each key; nor in appearance and in operation was it the same as the modern player. On the contrary, it was radically different from the player action of the present time with its primary and secondary collapsible pneumatics, and the question that arises now, is: Who invented the modern player action? And the answer to that is as follows:

In the attachment invented by Fourneaux, of France, the keys of the piano were actuated by pneumatics; in other words, Fourneaux was the first man, according to the record, to combine, in a keyboard attachment for musical instruments, a perforated board with a secondary pneumatic for striking the keys of a piano. But the Fourneaux device did not have a primary pneumatic system or that which was equivalent. On the contrary, it had a series of fingers which registered with the perforations in the sheet, admitting and excluding the air to the pneumatics, as did all the early player inventions. (See patents to Seytre, Hunt & Bradish, Fowler, Arno, Matthews, Van Dusen, Chase and others). But Fourneaux could not use a flexible sheet on rolls. He had to use heavy cardboard, hinged together to actuate the fingers and endure the wear and tear thereof upon the perforated cardboard. In the McTammany player the strain of opening the valve or striking a string did not depend on the sheet, the strain being transferred to the grooved roll B, which pneumatically opened the valve, while only the weight of the finger rested on the sheet; therefore, permitting the use of the flexible paper on winding and rewinding rolls and, while the trade bought and sold the McTammany instruments thus constructed, by the thousands, and considerable business was established in these finger instruments, yet the fingers were objectionable and nobody knew it better than the writer. No sooner had I finished my last instrument at St. Louis than I began to devise some means to dispense with the fingers. So, early in the year 1877, I conducted a number of experiments at Cambridge, Mass., with that object in view, which experiments resulted in the plan set forth in my patent No. 400,102, which may be regarded as the first practical primary system, and the origin and forerunner of the present plan, though differing in construction, operation and application of the air. In this connection I

herewith submit the affidavit of James H. Salmon and George Currier:

To the HONORABLE COMMISSIONER OF PATENTS, WASHINGTON, D. C., or THOSE WHOM IT MAY CONCERN:

(Affidavit of James H. Salmon.)

My name is James H. Salmon. I am a resident of Cambridge, Mass.; am sixty years of age, and am employed by the Briggs Piano Company, of Boston, Mass., as superintendent. I have known John McTammany since 1877, and am quite familiar with his experiments in connection with mechanically operated musical instruments.

At the request of Mr. McTammany I have examined the drawings and specifications, now on file at the Patent Office, Washington, D. C., in connection with patents No. 290,697, dated Dec. 25th, 1883; No. 242,786, dated June 14th, 1881; No. 244,069, dated July 12th, 1881, and No. 400,102, dated Oct. 23rd, 1885. I recognize these drawings and specifications as representing models made by me at the request and under the direction of Mr. McTammany, while in his employ at Boston and Cambridge, Mass. These models were made by me between the dates of October, 1877, and May 18th, 1880. Figure seven of the drawing, in connection with patent No. 290,697, shows the automatic operation of the instrument by the entry of a series of fingers in perforations in the music sheet. Figure eight of the same patent shows the air passing directly through the sheet, and into the reeds, being same mechanical operation as shown in filgures 2 and 3 of the drawings and specifications filed with Patent No. 244,069, dated July 12th, 1881. Referring to the drawings and specifications connected with Patent No. 400,102, I recognize part of the model as having been made by me under the direction of Mr. McTammany, and while in his employ; other parts of said model I believe to have been made by either the Kelly or the Severance Action Company, of Cambridge, Mass. This work was done at some time in the spring of 1879. There had been considerable wear of the finger-points by reason of the paper acting thereon, and the question had been discussed between Mr. McTammany and myself as to how the instrument could be improved so as to obviate this difficulty, and this improvement was made for that purpose. No instrument with this improvement was ever manufactured by me or under my direction, but I am reliably informed that such instruments were subsequently manufactured by Mr. McTammany after moving his business to Worcester, Mass., in 1880. The object of the invention is self-evident, namely, to substitute the pneumatic action for the fingers.

Dated at Cambridge, Mass., this 27th day of July, 1910.

(Signed) JAMES H. SALMON,

Cambridge, Mass., July 27th, 1910.

Middlesex, ss.

On the 27th day of July, A. D., 1910, before me personally appeared James H. Salmon, to me known and known to me to be the person who signed the foregoing affidavit and made oath that the statements by him subscribed are true.

Before me, John Lathrop Dyer, Justice of the Peace.

Cambridge, Mass., July 28th, 1910.

Middlesex, ss.

On this 28th day of July, A. D., 1910, before me, personally appeared George Currier, of Cambridge, County of Middlesex, and commonwealth of Massachusetts, and being duly sworn by me, made oath that he had examined the statements above subscribed by James H. Salmon, that he knows of the contents thereof, and to his own knowledge the statements of fact therein contained are true.

Before me, John Lathrop Dyer, Justice of the Peace.

Stamford, Conn., May 20th, 1911.

At this time I was doing business in Cambridge, Mass., and our circulars and letter heads read as follows:

"J. McTammany, Jr., manufacturer of automatic organs and organets, Factory No. 1, corner Main and Douglass streets; Factory No. 2, corner State and Osborne street; office and warerooms, 511 Main street, Cambridgeport, Mass., U. S. A."

But as most of our supplies at this time came from Worcester, Mass., and being offered by the Board of Trade of that city a satisfactory inducement, I moved our works to that city in the year 1879, entering into a working agreement with G. W. Ingalls & Co., which lasted several years.

Mr. Ingalls was interested with William D. Parker in a valve tremolo and I frequently met Parker at the office of Mr. Ingalls, and in that way became acquainted with him in 1880. I soon got him interested in my plans. He was then in the employ of the Taber Organ Company, of Worcester, but I rented a loft in an old tannery, opposite the Ingalls works which I fitted up and there, with a few men in 1880, we began the manufacture of the first full-fledged pneumatic players ever built, and which contained a primary and secondary pneumatic system, now known and recognized as the standard player action of America, the country where the player originated. In support of the experimental work I did there, I submit the following affidavits:

My name is Walter G. Ingalls, a son of G. W. Ingalls, manufacturer of organ reeds and organ supplies. I am fifty-six years old. My occupation is that of church organist and I reside in Worcester, Mass. I have known John McTammany since 1880 or from the time he contracted with my father to manufacture automatic musical instruments for him, using rolls of perforated paper. I am aware of certain experimental work being done by my father, W. D. Parker, John McTammany and others with a view to the development of the pneumatic system in its application to pianos, organs and other instruments. Several patents were taken out by my father as early as 1881. The pneumatic system was developed about the same time and applied to the Taber and Taylor and Farley organs, and I am aware that John McTammany applied the pneumatic system to a square piano, the action being governed by a perforated roll of paper located substantially the same as in the organ. It was a matter of general knowledge in the city that McTammany, Wright and Brown were engaged in the application of the perforated roll to the piano. I have never heard of or seen a roll being located elsewhere than above and back of the key board. That is where my father located it and that is where McTammany also located it.

(Signed) WALTER G. INGALLS,

Commonwealth of Massachusetts.
Worcester, Mass., January 19, 1912.

Worcester, ss.

Then personally appeared Walter G. Ingalls and made oath that the above statement subscribed by him is true.

Before me,

JOSEPH K. GREENE,
Notary Public.

(Seal)

My name is Clarence E. Steere. I live in Worcester, Mass., and I am sixty-seven years old, and a dealer in musical instruments. I first became acquainted with John McTammany in or about the year 1880. I met him at the factory of the Taylor and Farley Organ Company on Hermon street in the city of Worcester, where I was employed as tuner and salesman. McTammany was having instruments manufactured by G. W. Ingalls & Co., 25 Hermon street. These instruments were small reed instruments. Subsequently I learned from McTammany and others that he proposed to apply his system to larger instruments, and a room was taken in the old tannery opposite the Ingalls factory, where the developing was done. It was generally understood that McTammany, Parker, Fuller and others were engaged in applying the pneumatic system to organs and pianos, and it was cur-

rently understood that McTammany had been the pioneer and moving spirit in the introduction of the player. Of course many others came into the business since, but my first knowledge concerning the operation of musical instruments by a roll of perforated paper was imparted by McTammany, who seemed to think there was no limit to the things that could be done in a musical way by means of the perforated sheet and pneumatic system.

Charles E. Fuller was familiar with the mechanism of the square piano and did piano and organ repairing, and I understood that Fuller had been employed by McTammany in conducting their experiments in relation to the piano. Mr. Fuller is dead.

(Signed) CLARENCE E. STEERE,
Commonwealth of Massachusetts.

Worcester, Mass., January 19, 1912.

Worcester, ss.

Then personally appeared the above named Clarence E. Steere and made oath that the above statement subscribed by him is true. Before me,

JOSEPH K. GREENE,
Notary Public.

(Seal)

Fig. 1.

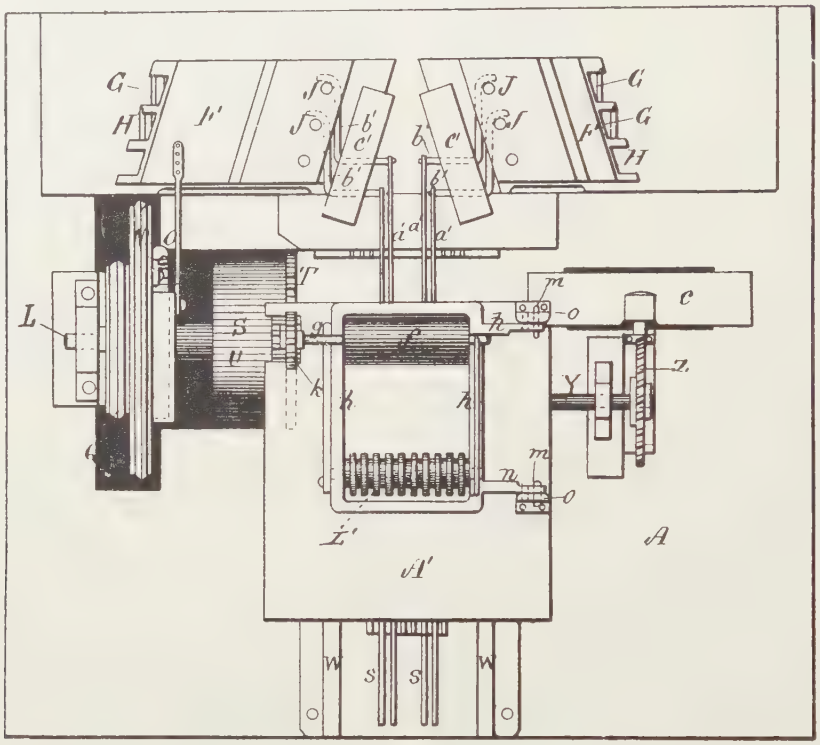

Fig. 2.

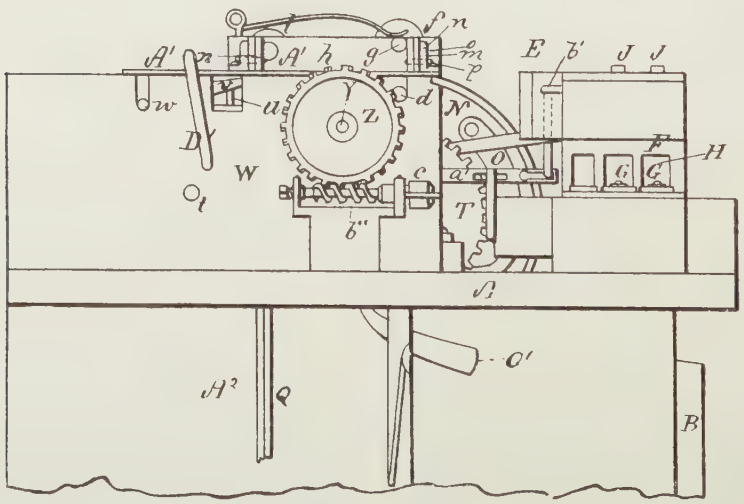

McTAMMANY PATENT, No. 290,697, DECEMBER 25, 1883.

My name is Frank A. Beane. I am a resident of Worcester, Mass. I am fifty-eight years old and engaged in the insurance business. I have known John McTammany since 1880, or from the time he contracted with G. W. Ingalls & Co. for the manufacture of organettes and other instruments operated by rolls of perforated paper. At that time I was superintendent of the G. W. Ingalls works, 25 Hermon street, and had charge of getting out the parts of the McTammany instruments and about that time McTammany entered into an agreement with W. D. Parker of this city for the manufacture of larger instruments on the pneumatic principle, and a room was fitted up by McTammany in an old building across the street from the Ingalls factory for the development and manufacture of the new instruments.

Furthermore, I understood and it was correctly reported, that McTammany, Parker, Rice and Fuller were engaged in the building referred to applying the pneumatic player mechanism to organs and pianos.

The organs used by them in which they inserted the player mechanism were the Taylor and Farley and Taber organs.

Fig. 3.

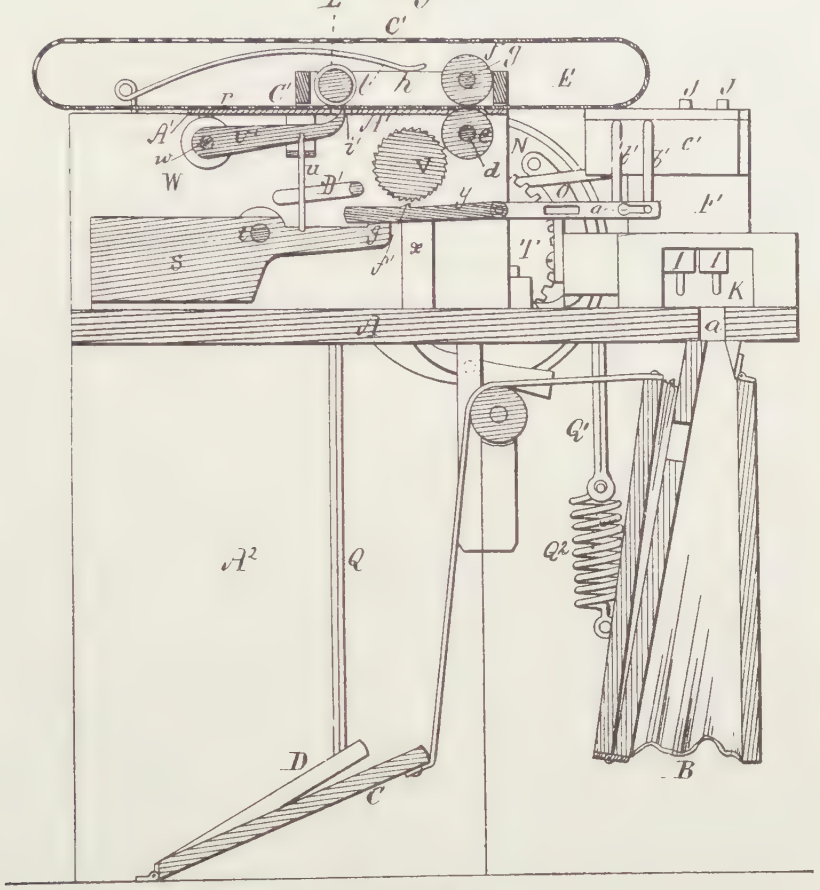

Fig. 4.

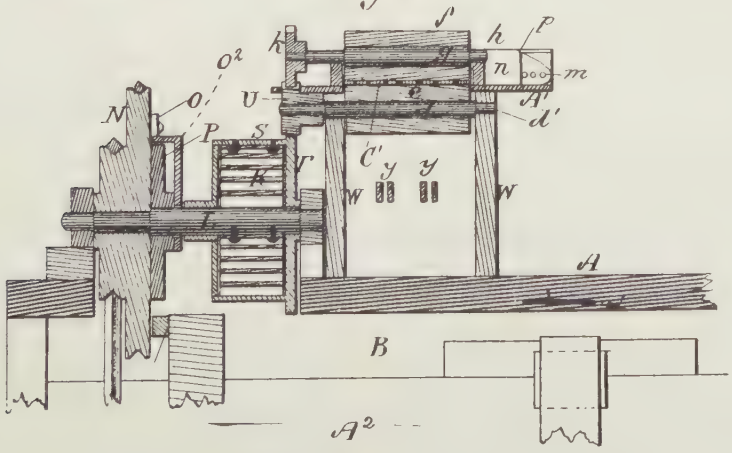

McTAMMANY PATENT, No. 290,697, DECEMBER 25, 1883.

What piano they used I cannot tell. I simply knew they applied it to the piano and that Parker being unfamiliar with piano construction, Fuller was employed to do that part. Fuller was a tuner and repairer of pianos and at that time worked for the Taylor and Farley Co. Fuller is now dead.

(Signed) FRANK A. BEANE,
Commonwealth of Massachusetts.
Worcester, Mass., January 10, 1912.

Worcester, ss.

Then personally appeared the above named Frank A. Beane and made oath that the above statement subscribed by him is true.

Before me,
JOSEPH K. GREENE,
(Seal) Notary Public.

AFFIDAVIT OF DANIEL A. TOURTELLOTTE.

My name is Daniel A. Tourtellotte, a resident of Worcester, Mass. I am seventy-two years of age, having formerly been employed by the Taylor and Farley Organ Company as a fly finisher. At present I am employed by the M. S. Wright Co., of said Worcester. In the manufacture of organs and piano

Fig. 5.

Fig. 6.

supplies I have known John McTammany ever since he began the manufacture of paper operated musical instruments in Worcester, which I believe was about the year 1880. He visited the Taylor and Farley Organ Company's plant almost every day, where he bought Taylor and Farley organs and consulted Charles S. Fuller regarding certain experimental work going on across the street in what was known as the old tannery, where McTammany had fitted up several rooms for experimental purposes. The Taylor and Farley Co. were shutting down and Mr. Fuller was not steadily employed, so he took all the outside work he could get, tuning and repairing pianos and organs, and also doing experimental work for McTammany. Our work benches were side by side, so I had an opportunity to hear and see what was going on. In fact Mr. McTammany made no secret of his plans for he often explained to me what he was doing and trying to do, and he not only was doing these things himself, but was urging other manufacturers to engage in the player business, so that several manufacturers ultimately entered the automatic ranks, and Worcester became the headquarters of the craft.

When the Taylor and Farley Co. shut down Mr. McTammany made an arrangement with the Taber Organ Co. for a further supply of instruments. I have been shown those cuts or organs, the Taylor and Farley Co.'s, the Taber and the Munroe organ, all of which I recognize as being standard instruments of that time in which had been introduced the McTammany pneumatic player mechanism. While the Taylor and Farley organs were being used by McTammany a sample pneumatic action was kept by Fuller adjacent to his bench, from which he took measurements to cut out as much of the organ as was necessary to make room for the pneumatic action, which action, to the best of my recollection, resembled in a general way the present pneumatic system in general use. Not only did McTammany introduce his mechanism into the organs mentioned, but also to my knowledge embodied his mechanism in a square piano. The piano was brought to the Taylor and Farley factory and there the strings and action were removed by Fuller at the direction of McTammany and W. D. Parker. Then several holes were cut in the iron plate and some cutting of the wood work, then it was removed across the street where Parker introduced the pneumatic action. When that was done Fuller put in the strings and tuned it, and it was generally understood that the experiment was successful. What subsequently became of the piano I cannot tell, except that I heard Fuller and McTammany discussing how to make a better one by the use of a different iron plate.

(Signed) DANIEL A. TOURTELLOTTE.

Commonwealth of Massachusetts.
October 14, 1913.

Worcester, ss.:

Then personally appeared Daniel A. Tourtellotte and made oath that the above statement subscribed by him is true.

Before me,
JOSEPH K. GREENE,
(Seal) Notary Public.

AFFIDAVIT OF JOHN McTAMMANY.

My name is John McTammany, a resident of Stamford, Conn. I am sixty-eight years of age and an inventor by occupation. I formerly resided in Worcester, Mass., having moved there from Cambridge in said State in 1879. I contracted with G. W. Ingalls & Co., of said city, a manufacturer of organs, organ reeds, and organ supplies, to manufacture a line of perforated paper musical instruments known as organettes, automatic and combination organs, keyboard attachments, and Melopeans, all of which were covered by the McTammany patents. About the same time I entered into an agreement with William D. Parker, of said Worcester, to apply the McTammany pneumatic player action to the Taylor and Farley, and later to the Taber & Munroe Organ Reed Company organs. This work was done under my direction in a building across the street from the plant of the G. W. Ingalls & Co., where were employed W. D. Parker, Charles E. Fuller, a man by the name of Rice and several others whose names I do not now recall. The three organs referred to containing the McTammany pneumatic actions were photographed at the time of their completion and the cuts that appear in the accompanying pages were taken from said photographs, which bear dates of 1880 and 1883, inclusive. The names of Taber and Taylor and Farley appear on the nameboards of each instrument. At the same time and place we also applied the pneumatic player mechanism to the square piano, in somewhat the same manner as it is now applied to the player grand. The perforated music rolls being located in substantially the same place and in the same manner as they were in the organs previously mentioned, namely, above and back of the keyboard. In the construction of the organs the wind was conducted through channeled boards from the tracker bar to the striking pneumatic. This was found impracticable in dealing with the piano proposition. Consequently, rubber tubing was substituted instead of the channeled boards to actuate the striking pneumatics, and according to my knowledge and belief this was the first occasion when rubber or flexible tubing was employed for such purposes. The striking or secondary pneumatics were in the form of a small collapsible bellows, split sheep skin being used instead of rubber cloth for the working part. I distinctly recall the fact that the tracker bar was adustable forward and back, and if the instrument can be located it will, in my opinion, be found that the tracker bar was adjustable endways also. The range was four octaves of the chromatic scale and I regarded the experiment as a complete success. The principal difficulty encountered in making the application of the player mechanism to the square piano was with the iron plate, which had to be mutilated in order to make the several connections between the upper and lower parts of the mechanism; that is, the parts connecting below the level of the keyboard with the parts located above thereof. But I knew of no reason why the form of the plate could not have been made to conform to the requirements of the player mechanism without in any way mutilating the iron plate or affecting the normal operation and musical results of the instrument.

This piano was sold by the McTammany Organette Company to Mr. C. E. Fuller, of Worcester. He resold it to some party living in some town outside of Worcester. Subsequently, it came back to the city in the way of trade and said Fuller was employed to repair it. Then it was resold and shipped to Springfield, Mass., where it was last seen in

an auction room in that city. The instrument is believed to be in existence now and a liberal reward has been offered for its recovery for use in pending patent litigation.

(Signed) JOHN McTAMMANY.

Sworn to before me this 20th
day of October, 1913, at Stamford, Conn.
WILLIAM F. WATERBURY,
Notary Public.

Having exhibited my player publicly at St. Louis, in July, 1876, under the law I had two years in which to make my final application for patents thereon. But at the expiration of the two years I was even worse off than when I left St. Louis. So being impoverished and unable to protect my rights as an inventor, the law declared my inventions public property—inventions which had cost me twelve years' labor and sacrifice, thus taken from me without warning, without justice and without reward. But I had gained some success and, seeing this, others immediately jumped into the field and began to compete with me in the manufacture of my own inventions. Such is our patent system, about which we brag and boast and to which we point with pride.

But, fortunately, during the interval between 1876 and 1888, I had made several important improvements for which I had patents granted.

United States Patent Office.
JOHN McTAMMANY, JR., OF BOSTON, MASSACHUSETTS, ASSIGNOR TO ALEXANDER McTAMMANY, OF AKRON, OHIO.

Automatic Musical Instrument

Specification forming part of Letters Patent No. 290,697, dated December 25, 1883. Application filed March 6, 1879.

To all whom it may concern:

Be it known that I, John McTammany, Jr., of Boston, in the county of Suffolk and State of Massachusetts, have invented certain new and useful improvements in organs or other analogous wind-instruments, of which the following is a specification.

This invention relates to automatic organs and similar musical instruments which are operated or governed by means of a perforated sheet of paper or other material constructed somewhat upon the principle of the pattern-cards of a Jacquard loom. Most of its features are equally applicable to those wind-instruments in which the blast of air passes through said perforated sheet, and to those in which the said sheet is used solely to govern mechanism which opens a passage from the bellows to the reeds. The latter kind posesses some important advantages over the former; but they need not here be dwelt upon. My claims, except where specially restricted to one form, apply equally to both.

The said invention consists in certain improvements, in, first, the mechanism operated by the treadle to actuate the machine; second, the device for feeding, winding, and guiding the perforated music-sheet; third, in the mechanism sometimes employed between the music-sheet and the reed-valves, to open the latter at will; and, finally, in various other parts of the instrument, and in the combination thereof, all as hereinafter set forth.

As the points which are novel will be stated in the claims appended to and forming part of this specification, I need not mention them more fully or particularly here.

In the accompanying drawings, Figure 1 represents a plan view of an automatic or "mechanical" organette embodying my invention; Fig. 2, a side view of the same; Fig. 3, a vertical section of the same; Fig. 4, a vertical section of the driving mechanism; Fig. 5, a plan view of part of the music-sheet. The foregoing figures, except Figs. 4 and 5, illustrate exclusively an instrument in which the music-sheet has the form of an endless belt. Fig. 6 represents a detail view of a pivoted latch or arm used in said form of my improved instrument. Fig. 7 represents, however, a music-sheet which does not have its ends fastened together, and the rolls which operate it and on which it is wound, also the supporting-frame and the lever which is governed by said sheet. These parts are shown detached from the instrument, and most of them in vertical section. Fig. 8 represents in perspective a detail view of two of the rolls and a part of the music-sheet shown in Fig. 7.

In the several figures of said drawings, except Fig. 7, the same letters indicate the same parts.

A designates the platform or table upon which the operative parts of the instrument are mostly supported, while in the space A^2 below said table is placed the bellows B, which create the current of air for vibrating the reeds. Two pedals or treadles are employed—C for operating said bellows, and D for feeding the music-sheet. These treadles or pedals are in the lower portion of space A^2, below platform A.

F designates a reed-board, which is supported on the rear part of said platform and above said bellows, and contains the reeds G and the cells H. These reeds are of different pitch for producing different musical sounds. The valves of the reed-cells are shown at I I, provided with pins on stems J J. The valve-chamber K, below the reeds, communicates with bellows B, so that the current of air caused by said bellows may pass through any one of the reeds G whenever the valve of said reed is open.

From the treadle D a strap, Q, is extended up above the platform A, its other end being attached to a disk or wheel, N, which turns loosely on a shaft, L, that is journaled in bearings on said platform. This disk carries a hooked pawl, O, which engages with the teeth of a ratchet-wheel, P, that is fast on said shaft, as shown in Fig. 4. Disk N, as shown in Fig. 4, is constructed with an enlarged portion and a lesser portion. The strap Q is connected to said lesser portion, and a second strap, Q′, is connected to said larger portion, the other end of said second strap being attached to a retracting-spring, Q^2. The alternate action of treadle D and spring Q^2 causes said pawl or dog O to communicate a step-by-step motion to ratchet-wheel P. A retaining-pawl, O′, engages with said ratchet-wheel. The operation of these actuating devices is more particularly as follows: The downward movement of the treadle causes a forward movement of disk N and operating-dog O, which latter, engaging with ratchet-wheel P, moves said ratchet-wheel forward. The retaining-pawl O′ then holds the ratchet-wheel P at the point thus reached, while the retracting action of spring Q^2 turns said disk and pawl back to their original position. The result is an intermittent forward motion of shaft L, with no backward motion thereof. When rapidly operated, the periods of rest are very short indeed.

R designates a strong band-spring, which is coiled around said shaft, its inner end being attached thereto, and its outer end attached to a barrel, S, which is free to turn on a shaft, L. The construction and operation of this barrel are like those of a common watch-barrel, and it carries a gear-wheel, T (shown in Fig. 1), which meshes with and operates a pinion, U, fast on the shaft *d* of a roll, *e*, as shown in Fig. 4. The pinion U meshes with a similar pinion, *k*, fast on the shaft *g* of a roll, *f*, which is above said roll *c*. These rolls receive between them the music-sheet C^1, Fig. 4, and feed it forward. This sheet may be either an ordinary strip or an endless band or belt. The latter is shown in Fig. 1. Either form may be converted into the other by attaching or detaching the ends of the sheet to or from one another. The gearing together of wheels T U affords a very direct and convenient method of operating the lower feed-roll, *e*, directly from said shaft L.

The actuating devices above described have been found very efficacious for the purposes stated; but I may employ many other forms to effect the same result. Most of the features of my invention are not dependent on the kind of motor employed.

When an endless music-sheet is used (such as that shown in Fig. 1), it is necessary to provide for moving the upper feed-roll out of the way. To effect this I mount said upper roll, *f*, in a frame, *h*, which is hinged to the top of a supplementary platform or table, A′, that is supported on platform A. By turning said frame back on its hinge it can be re-

moved laterally from within the endless belt of music-sheet C, so that another music-sheet can be substituted therefor, thus readily allowing the change of tunes. The same result may be effected by removing the frame *h* from the instrument without disturbing the endless belt. To allow such disconnection I use for the hinges detachable pintles *m m*, which pass through lugs *n n*, attached to the frame *h*, and into lugs or small standards *p p* on the top of supplementary platform A′. By withdrawing these pintles the frame *h* is left without attachment on the hinge side to the rest of the machine. Each standard *p p* has two holes in it, either of which will receive the end of the pintle *m* that enters said standard. By shifting the pintles from the forward holes to the backward holes, or vice versa, the frame *h* is moved laterally across the platform A′ and the actuating mechanism. This sidewise

Fig. 7.

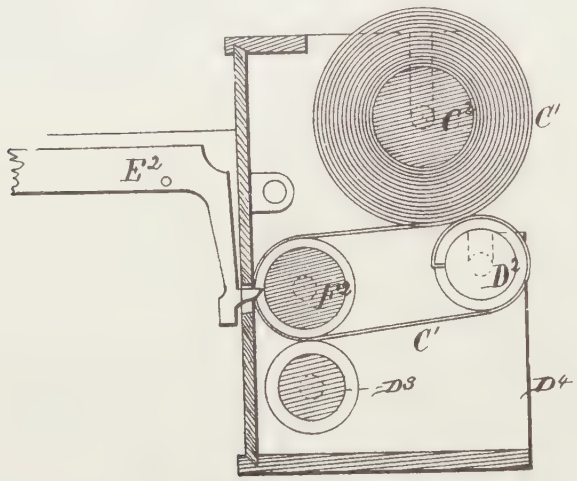

Fig. 8.

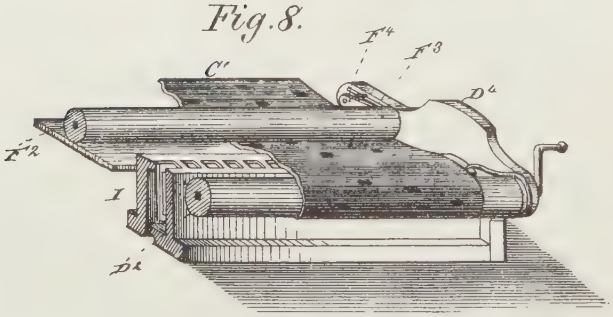

THE McTAMMANY PATENT, No. 290,697, DECEMBER 25, 1883.

motion of said frame is serviceable when the music-sheet is made with two series of holes arranged in parallel rows, as shown in Fig. 5, also when it is desirable to change the pitch of the tune by shifting the perforations from over one set of reeds to a position above another set thereof. Each row or series of perforations is adapted to play one tune, and after that piece is finished it is only necessary to shift the frame laterally, as stated, in order to bring the other set or series of perforations into use. This lateral shifting may be effected by other means besides the duplication of the holes in the lugs *p p*. For example, an adjusting screw rod is often employed with satisfactory result. The devices for lateral adjustment of the frame and sheet are also important; but the attachment of the frame *h* so that it can be removed out of the way of the music-sheet is more important than either, since without that feature endless music-sheets could not practically be employed. My improvements, as shown, make it possible to accomplish this in either one of two ways—namely, by turning the frame *h* back upon its hinge, or removing it entirely from the instrument on withdrawing the detachable pintles; but either method by itself comes within my invention.

It is very desirable to employ means for varying the degree of power exerted on and by spring R, in order to retard or accelerate the time of the music at will. For this purpose (when the hereinbefore-described spring-motor is employed) I use a bent or segmental shield, O², which is mounted loosely on shaft L, behind ratchet-wheel P, and extends over said ratchet-wheel. This shield is made adjustable in a rotary direction upon said shaft, and covers some of the teeth of said ratchet-wheel. By adjusting said plate toward the dog O it may cover one or more of the ratchet-teeth on which the said dog would otherwise operate, and its action will thus be shortened. The reverse adjustment will lengthen the action of the dog. The "time" of the tune can thus be regulated to any desired degree.

The frame *h* is provided with a transversely-grooved roll or bar, L¹, which bears against the music-sheet above latches hereinafter described, to hold said music-sheet down to its work. The side bars of said frame serve to guide the music-sheet, as shown in Fig. 4, as the latter is fed by rolls *e f*. The upper roll, *f*, is vertically movable in its bearings in the said side bars of said frame, and is held down to its work by the pressure of spring *l*, as shown in Fig. 2.

The gear-wheel T, hereinbefore described, engages with a pinion on the shaft of a fluted or toothed roll, V, the other end of which shaft is extended at Y, and provided with a cog-wheel, Z, that operates a worm, *b″*, the shaft of which carries a fan, *c*, which acts as a balance-wheel for shaft L and Y and devices affected thereby. Said fluted roll V turns in bearings W W on table or platform A. The said toothed roll V is adapted to engage a tooth, *f′*, formed on the upper side of each one of a series of horizontally-sliding rods, *y*, which have a pin-and-slot connection at *a* with the lower arms of a series of bell-crank levers, *b′*. Each lever *b′* opens a different reed-valve, and this opening is effected whenever its rod *y* is thrown into engagement with said rotating fluted roll V. This engagement is governed by the perforated music-sheet C′, as follows: A series of latches or arms, U′, are pivoted at their rear ends to the bearing-plates W, which, as before stated, are erected on table or platform A. This pivoting may be effected by means of a rod extending across from one bearing-plate W to another, suitable washers being interposed between said arms or latches. The free end of each latch or arm U′ is provided with a point, which enters the perforations *r* of music-sheet C′ as these successively come opposite said point. These points also pass into the grooves of the pressure-roll hereinbefore described. A rod, *u*, extends downward from each arm to one of a corresponding series of levers, *s*, which are pivoted near their middles at *t* and weighted at their front ends. The rear end of each one of said levers *s* is formed with a flat nose, *g*, which bears against the under side of one of said rods *y*. The tendency of each weighted lever *s* is thus to hold its rod *y* in engagement with fluted roll V and cause the opening of the reed-valve governed by said parts. This tendency is, however, neutralized by the pressure of music-sheet C′ against the point of the appropriate pivoted arm or lever-latch U′; but when said point passes up into one of the openings *r* the lever *s*, connected to said pivoted arm, operates to effect the engagement which opens the valve, as stated. When said opening *r* passes said point, the pressure of the sheet again disengages the said rod *y* from the said fluted roll V. The valve-spring of its reed-valve then restores said rod to its original position. The said bell-crank levers turn in bearings *c′* and the slots of rod *y*, in which said levers engage, are made to taper, as shown in the drawings, so that the actuated end of each rod can be inserted into the larger end of the appropriate slot and slipped to the other end of said slot, where it fits tightly. These ends of the bell-crank levers are recessed circumferentially to form terminal shoulders, which prevent the accidental separation of said parts. Each latch or pivoted arm U′ has its point *i* pivoted to the main part of said arm at *k′*, so that when the end of an opening or perforation, *r*, of the music-sheet is reached the said sheet will not be impeded by said point, but the latter will turn freely

on its pivot. The weight of each point *i* is adjusted with relation to its pivotal point so that it will automatically tilt up into the position shown in Fig. 6 when not forced down by said music-sheet.

A lever, D′, is arranged so that it can be turned or otherwise operated at will to hold down the operating ends of levers *s*, so as to prevent the engagement of rods *y* with fluted roll V. When the instrument runs down, some of said rods are often left in engagement with said roll, and the instrument at starting would not operate well without some such device as this lever. A screw or spring or other equivalent device may be arranged to effect the same result.

When the music-sheet is to be moved backward, or rewound in that direction, it becomes necessary to get out of the way the noses of levers *s* and also the upper feed-roll. This lever (or other device substituted as stated) D′ affects the former result, and the movability of the upper feed-roll allows the last obstruction to be withdrawn and the music-sheet to be moved backward or rewound freely.

Of course, the various devices hereinbefore described for opening the reed-valves will not be required when the music-sheet itself acts as a valve. In that case the current of air passes directly through said sheet to or from the reeds. When a strip with its ends unattached is used as a music-sheet, the said strip must be wound on rollers or otherwise after passing over the reeds, in order to be in condition for subsequent use. When rollers are employed, it is evident that the strain of the winding-roll will increase as the same increases in size, and the operation of the instrument would become impracticable unless some compensating device were employed. In Fig. 7 I have shown such a device.

Fig. 8 shows the roll D^2 used as a driver as well as a winder.

A frame or casing, D^4, attached to the main part of the instrument, has rolls C^2, D^2, F^2, and D^3 journaled in its side pieces. The lowest roll, D^3, is the driver, corresponding to *e* of the other figures. F^2 is the grooved upper feed-roll corresponding to *f* of the other drawings. This draft of roll D^3 on music-sheet C′ pulls the sheet off from one of the winding-rolls D^2 or C^2, which, by friction, causes the other one of said winding-rolls to rotate in the opposite direction and wind the music-sheet thereon. In the ordinary operation of the machine the music-sheet passes from the lower or rewinding roll, D^2, to the upper roller, C^2; but this may be reversed when this becomes desirable.

The friction of the rolls D^2 C^2 and the music-sheet thereon will prevent the elasticity of the paper from causing either of the rolls to fly around and unwind. C^2 and D^2 are made vertically movable in their bearings. The music-sheet C′ is attached at its lower end to roll D^2 by entering a longitudinal slot of the same, as shown in Fig. 7. It passes from said roll D^2 around said pressure-roll F^2, acting, as before described, on the nose or point of lever E^2 (similar in function to the latches before described), and thence to the upper roll, C^2. This upper roll rests on the lower roll, D^2, and is made capable of vertical motion in its bearings, so that as said upper roll increases in diameter it rises slightly, and as it increases in weight it may allow the lower one to slip under it. Thus the continual change in the relative sizes of the upper and lower rolls of paper is prevented from doing any damage whichever way the sheet is wound.

It is desirable to hold the pressure bar or roll of the instrument against the music-sheet and table by spring-pressure. This may be conveniently effected by hinging the supports of said pressure-roll to the frame or casing and using springs to bear on its gudgeons. In Fig. 8 one of said springs, F^3, is employed, bearing on one of the supports or bearing-arms F^4 of roll F^2. This arm or support is pivoted to one of the side plates or bars of the supporting-frame D^4. The opposite plate or bar is removed, as also the support and spring on that side. The pressure bar or roll F^2 in this case does not bear on the sheet C′ immediately above the valves, and therefore there is no occasion for grooving it. The function of said roll is, however, the same as that of the pressure-roll shown in the previous figures of the drawings. Of course the pressure-roll may be arranged in slotted bearings like C^2 and D^2; or any other equivalent method of attachment may be employed.

The music-sheet having two or more sets of perforations representing different tunes, in combination with the reeds, and the shifting devices for changing one tune for another, form the subject of a separate application.

Having thus described my invention, what I claim as new and desire to secure by Letters Patent, is—

1. In an automatic musical instrument adapted to be governed by a perforated music-sheet, the combination of the reeds, reed-cells, and bellows with a pedal and means operated by said pedal for opening and closing said cells, substantially as set forth.

2. In combination with an automatic musical instrument adapted to be operated by a perforated music-sheet, substantially as shown and described, a feed-roll hinged to the adjacent part of the structure and adapted to facilitate the application or removal of a music-sheet.

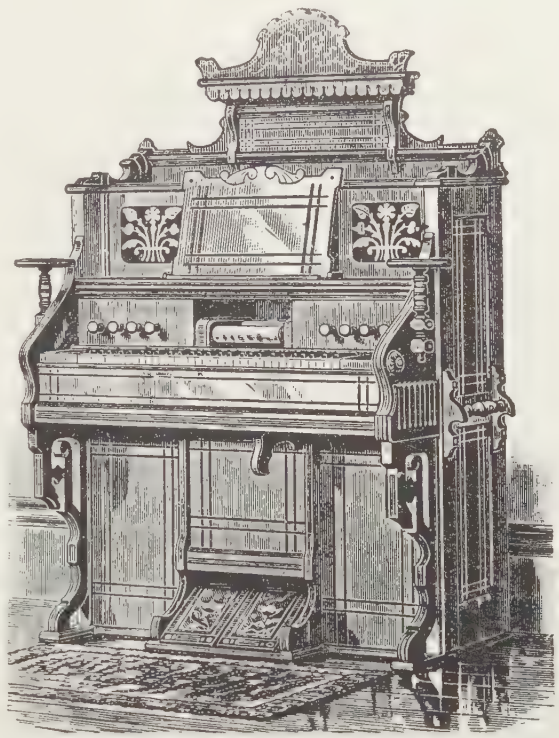

MUNROE ORGAN, STYLE F, WITH McTAMMANY PNEUMATIC ACTION.

3. The combination, substantially as hereinbefore set forth, with the reeds and bellows and perforated music-sheet, of the pedal D and mechanism put in motion by it, and arranged and adapted to operate substantially as hereinbefore set forth.

4. In combination with a perforated music-sheet and two or more sets of reeds, a device for laterally shifting said music-sheet in order to change the key of the composition.

5. The combination, with the perforated music-sheet and reed-cells, of the shaft L, spring-barrel S, and rolls *e*, *f*, and L′, substantially as set forth.

6. The combination of the reeds, the perforated music-sheet, and the levers *v′* with the lever D′, constructed and arranged for depressing the said levers *v′*, for the purpose set forth.

7. In an automatic musical instrument, the combination with a perforated music-sheet, of a rack or frame, which is removable from said music-sheet and carries one of the feed-rolls thereof.

8. In an automatic musical instrument, the combination, with a perforated music-sheet of a frame or rack which is

removable from said sheet, and carries one of the feed-rolls and also a presser bar or roll, substantially as set forth.

9. In an automatic musical instrument, a removable guide-frame which directs the movement of the perforated music-sheet, substantially as set forth.

10. In an automatic musical instrument, a movable guide-frame, in combination with the music-sheet which it guides and the upper feed-roll which it supports, substantially as set forth.

11. In combination with a musical instrument and a music-sheet governing the same, a pair of winding-rolls, to which the ends of the music-sheet are respectively attached, and a pair of feed-rolls, which operate to draw the music-sheet from either one of said winding-rolls toward the other at will, one of said winding-rolls being driven by the other and adapted to yield in or on its bearing to compensate for the unequal accumulation of the music-sheet on said winding-rolls.

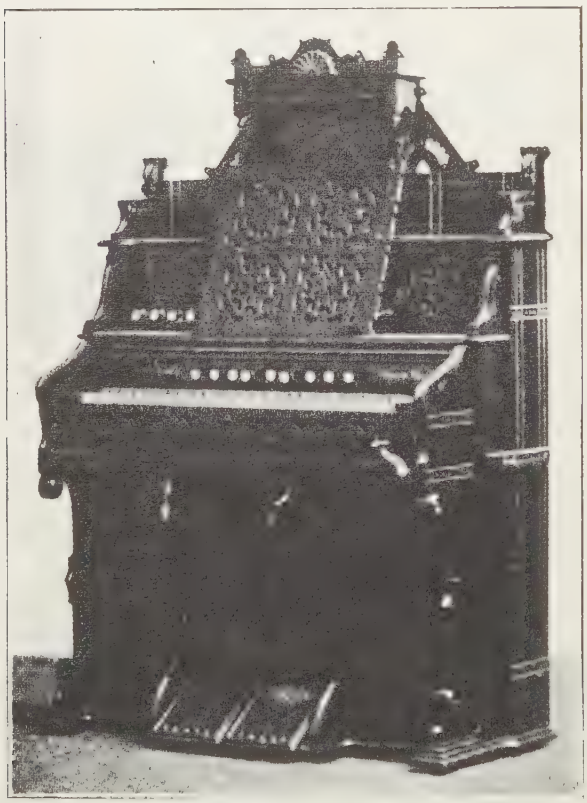

TAYLOR & FARLEY ORGAN WITH McTAMMANY PNEUMATIC ACTION, 1881.

12. In combination with a musical instrument and a music-sheet governing the same, a pair of winding-rolls, to which the ends of the music-sheet are respectively attached, and means for feeding said music-sheet from one of said winding-rolls to the other, the latter winding-roll being driven by the former and adapted to yield in or on its bearings to compensate for the unequal accumulation of the music-sheet on said winding-rolls.

13. In combination with an automatic musical instrument and the music-sheet governing the same, a pair of winding-rolls, to which the ends of the music-sheet are respectively attached, and a pair of feed-rolls, which operate on said music-sheet, the winding-rolls being free to rotate and in contact with each other, so that the drawing if the music-sheet from one of them will cause the other to rotate also.

14. In combination with a musical instrument and the music-sheet governing the same, a pair of winding-rolls, one of which rests against the other, and is movable to automatically compensate for the rolling of the sheet on one of said rolls.

15. In an automatic musical instrument, the combination of a music-sheet and a pair of winding-rolls, one of said rolls resting on the other, as stated, with two pairs of vertically-clotted bearings for said rolls.

16. In an automatic musical instrument, the combination of a treadle and a driving-shaft operated thereby with a perforated music-sheet and rolls operated by said driving-shaft, substantially as set forth.

17. The levers *s*, provided with the pivoted trippers *k'*, in combination with the music-sheet and the reeds and other operative parts of an automatic musical instrument.

JOHN McTAMMANY, JR.

Witnesses:
Louis A. Curtis,
F. Hunnewell,
F. Curtis.

In the meantime the finger instruments referred to had been discarded and the pneumatic system substituted instead. (See my patent, 390,385.) The Munroe Company was turning out a single reed instrument with a single set of pneumatics and, while it was doing a considerable business, yet the goods were not satisfactory. There was something lacking. In the meantime, Parker had resigned from the Taber Organ Company, and was devoting all his time to the development and manufacture of what we called our combination organs; that is, we took the standard Taber and Taylor & Farley organs and put our pneumatic action inside and sold them. These instruments contained the primary and secondary pneumatics, substantially as they are constructed at the present time. (See exhibits).

I had on several occasions shown the Munroe Company our combination organ, using several sets of reeds with two sets of pneumatics primary and secondary, and while the company recognized and admired their musical effect it objected to them on account of two sets of pneumatics. The company claimed it had trouble enough with single pneumatics; that to adopt my system would multiply the mechanism and increase the cost. So nothing resulted, at that time, and we kept on for another year—1882—at which time the Taylor & Farley people closed down and we could obtain no more of their organs. We applied to the Munroe Company to supply the organs for us. By this time the company had come to fully realize the superiority of the primary pneumatic system and said as much. So, instead of agreeing to manufacture for us, the company submitted a counter proposition in which it proposed that I join the company and take charge of its experimental department, a proposition I agreed to, provided every instrument containing my inventions should also bear my name, as inventor and patentee, and that I be paid a royalty on every reed contained in any instrument manufactured by them.

This was accepted, and the following label subsequently appeared on instruments manufactured by the Munroe Company:

"All automatic musical instruments manufactured and for sale by us are protected by the McTammany patents.
"MUNROE ORGAN REED CO.,
"Worcester, Mass., U. S. A."

Now the instrument which I desired the Munroe Company to make for us was designed by myself, the drawings being made by Parker under my direction. This instrument contained every essential element of the modern

player action, and the wind motor was substantially the same as that in use at the present time, and the motor was invented by Parker and myself. Under an agreement between the Munroe Organ Reed Company and the writer I was to be given a license on all patents gotten up by myself and Parker, which agreement never was fulfilled. That is also a matter of court record. The instrument referred to was the first manufactured by the Munroe Company under the new agreement. Later, when they made up their catalogue, it was named Style F. And no radical improvement has ever been made on that instrument or its action from that day to this. I claim that that instrument is my invention and a culmination of my work, begun in 1866, and first publicly exhibited in 1876, ten years later. Upon these two

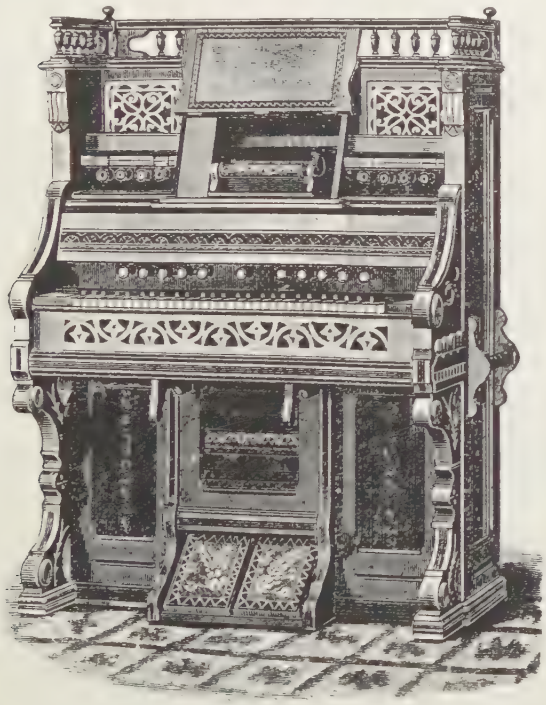

MUNROE ORCHESTRONE ORGAN, STYLE 44E, WITH McTAMMANY PNEUMATIC ACTION.

instruments I base my claims to the inventorship of the modern player mechanism, whether applied to an organ, piano, or anything else.

It was in 1885 that we made our agreement with the Munroe Company, and I entered its establishment, taking Parker with me. I had been experimenting continually from the time I reached Boston, in the fall of 1876, until I entered the establishment of the Munroe Organ Reed Company, and I had applied for several patents covering my improvements. But I had so much difficulty in getting my rights, and the business was attended with so much litigation and cost, that I became disgusted with the whole patent system and came to the conclusion that, if I was to get any benefit out of my inventions, it would depend upon my merits as a business man rather than from my patents. In fact, I had come to regard a patent in the hands of a poor man as worse than worthless, even if it was as valuable as the patent which covered the telephone, while a worthless patent in the hands of wealth was a valuable legal instrument with which to club the heads of their weaker competitors. In other words, I had come to regard law, as administered in the courts, as an instrumentality in the hands of the rich for the destruction of the poor. I wanted to keep out of it, so I had not applied for patents on my inventions, except in one or two instances, when my brother insisted, he being associated with me in the business.

But when we closed with the Munroe Company it went over my inventions and insisted that I make application for patents on certain things, for their benefit and protec-

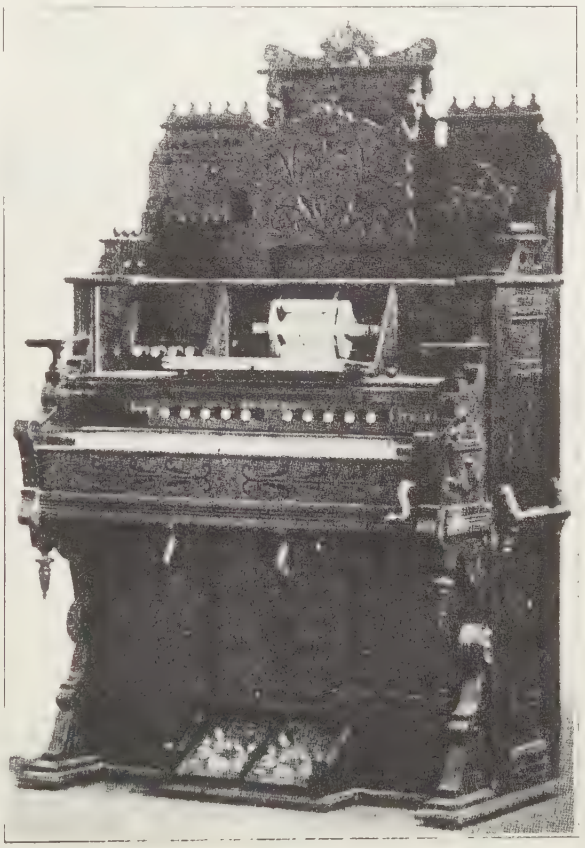

TABER ORGAN WITH McTAMMANY PNEUMATIC ACTION, 1880.

tion, which I did. These patents were numbered as follows:

390,385. 321,738. 390,386. 374,616. 400,102

There were many others, but these were the ones that they had reason to feel should be applied for. I had also made application for additional patents when I made my contract with the Ingalls Company to protect them in the manufacture of our goods, but most of my inventions were not patented, only about a hundred patents being issued to me, nor have my latest inventions in musical instruments and other lines been covered, for the reason that I have no faith in our patent system.

On the accompanying pages will be found several sheets of drawings intended to confirm the claims hereinbefore set forth. These drawings were made from illustrations

and sketches in my possession but which were badly worn by reason of the handling which they had been subjected to before the various tribunals to whom they had been submitted for inspection, from time to time during the controversy. But by taking the original cut of the Estey organ, kindly loaned us by said company, together with the patents thereon by Col. Fuller, of the Estey Company, combined with the drawings of the caveat filed in the Patent Office by me in 1876, it will be found that the drawings herein submitted are an exact reproduction of the instrument as it was invented and exhibited by me in 1876.

And, in support of the foregoing statement, I herewith submit the sworn affidavit of L. A. Wernery, a professional draftsman and mechanical expert who did the work.

I, L. A. WERNERY, of Brooklyn, County of Suffolk and State of New York, hereby certify that I have completed a series of five (5) tracings or drawings which I have marked for identification as follows:

Fig. 1-2-3-4-5 and denominated "McTAMMANY'S INTERIOR PLAYER OF 1876" and in this connection I desire to state that said tracings were made from the original caveat filed by John McTammany in the United States Patent Office on Sept. 7th, 1876.

I also had before me an illustration of the original Estey Organ, to which the McTammany player mechanism was first attached; said documents being supplied by said Estey & Co., for the purpose set forth. In addition I had before me the patents of Col. L. K. Fuller, General Manager of the Estey Company and inventor of said Estey Organ. I also had placed at my disposal the St. Louis Journal of July 9th, 1876, containing a published description of said instrument or player, together with other reliable data, whereby I was enabled to reproduce the instrument as shown and described in the original drawings and specifications hereinbefore set forth.

And I further certify that the drawings referred to as made by me are as complete a counterpart of the original instrument invented and publicly exhibited by said McTammany in 1876 as I have been able to make from the data referred to, all of which is a matter of public record on file in the U. S. Patent Office. (Signed) L. A. WERNERY.

State of Connecticut, } ss. Stamford, May 20th, 1911.
County of Fairfield }

Personally appeared L. A. Wernery, signer of the above affidavit, and took oath to the truth of the same before me.

WILLIAM F. WATERBURY,
Notary Public for Connecticut.

Not only did I invent the player mechanism, but I also, at the same time, constructed a working model of a machine for perforating the sheets automatically, and also by means of an ordinary keyboard adapted to govern a set of punches that perforated the sheet, as it was automatically fed through the machine; that the foregoing is referred to in my caveat of 1876 as follows:

"Any piece of music that is designed to be played is first produced by suitable perforating mechanism worked in connection with the keys of the organ on a continuous strip of paper, the relative length and position of the perforations indicating the duration and pitch of the notes represented thereby."

Of course this is a very inadequate description of the two machines which I had planned and constructed, which were of a comprehensive character. The whole caveat document I regard as worthless by reason of its brevity and incompleteness, and it has been of little value to me beyond enabling me to confirm certain facts and establish certain dates, testified to before the Commissioner of Patents, although as a novice in the patent business I attached great importance to it at the time as a protection against patent pirates.

Much has been said and written during the past few years about this and that concern having built up the automatic musical instrument business. But as a matter of fact, the Munroe Company of Worcester, Mass., turned out over 50,000 instruments a year, operating under a license from me, and to them and to myself the country is indebted for the full development of the automatic musical instrument industry up to that time—1889. So that I had not only led in the invention of the player but in its manufacture, also, and during the last two years of the existence of the Munroe Company I was general sales agent and controlled their entire output.

THE FOURNEAUX PATENTS OF 1863 AND 1871

Patent No. 60,702, under date of Nov. 4, 1863.

To M. Fourneaux for a mechanism designed to perform all music automatically on the piano called "Pneumatic Pianista."

Properly speaking, this mechanism is not a system for the crude translation of music: in a word, it is not a new kind of cylinder of pegged boards, nor of perforated card in imitation of Jacquards. On the contrary, I make use of these various processes but this mechanism comprises all the parts intervening between the cylinder or spiked strip and the instrument. It is properly speaking a complete new machine for playing the piano with the aid of a cylinder spiked board or Jacquard tape. To fully comprehend the importance of this new mechanism as to the results it produces, it is necessary here to enter into explanation and to review the action of those improved systems for the act of performing music automatically on pianos.

We know that the production of sound on the piano is made with the aid of hammers striking the strings in order that the sounds be produced with clearness, it is indispensable that a blow or "shock" be struck as the manufacturers say that there be stroke. This exacts from the part of the pianist to play quick and vigorous, quite different in that from the touch of the organ where it is only necessary to depress the key of a keyboard without striking it to produce the proper sound.

This stroke or blow, to express it better, has been the stumbling block of all those who have imagined using a mechanism for rendering music automatically with the aid of a cylinder or with all the other known means as that is done on the organ and harmoniums.

In these instruments (pipe or reed) each point of the cylinder or of spiked strip causes the pipe or reed to sound, while the end of the lever placed to that effect finishes its lifting on that pin, and as that lifting is not instantaneous, but is dependent upon the rotation of the cylinder, or of the sliding of the spiked board, the lever ends takes a certain time to life itself. This time is of no importance for wind instruments. It responds to whoever can place the finger to thrust down the key, and we know that the touching can be perceptibly slow and without agitation. But it is not at all the same for the piano where the hammers must act under the action of a blow and with a certain degree of speed in order that there be a clear and strong production of sound from the string considerations which render impossible the use of the movement of the shifting of a lever with a lip produced by the encounter of one of the pins of the cylinder for the immediate production of sound on the string struck with the aid of this movement.

It has then been thought of using the descent of the lever with a lip to go off at the moment when having accomplished its lifting on rising on one of the points of a note. This lip escapes from it to resume its normal position.

With the aid of this method it was previously found in the speed of the descent of the lip, no more dependent upon the movement of the cylinder. The possibility of employing this descent as the initial movement before being communicated to the corresponding hammer, one of the elements necessary to the striking of the hammers on the strings.

Now, to impart to this descent an augmenting of speed, the action of which on the hammer expends itself as a blow or shock on the string, no more was necessary than to adapt a spring to the lever being extended during the lifting of the lip and on being unbent or released striking the corresponding hammer with an amount of momentum proportionate to that tension.

This method indispensible with the ordinary schemes, is the principle of all the system invented for the automatic rendering of music on the piano.

In general, the customary mechanism are arranged so as to allow playing the piano with an ordinary keyboard, if it is desired, namely, the answer for two ends with a handle for automatic rendering and a keyboard for manual rendering.

These mechanisms are placed inside of the case of the piano arranged for that purpose.

In one system two series of hammers are employed, of these one is special and serves only for the ordinary keyboard and the other is for the mechanism suitable for automatic rendering. In another, there is only a single series of hammers which serve for the ordinary keyboard and the automatic mechanism.

In all cases the hammers, which are to strike the strings under the automatic action, are struck by those in such a manner that they are moved away during the lifting of the lipped lever, and come to strike the string immediately. These lips escape from the points. The intensity of the blow is, as I have said, determined by the tension of the springs properly placed; in fact, the elevation of the lip distancing of the hammer from the string the entire distance it must traverse to strike it, the descent of the lips, approaching of the hammer, speed and blow delivered, all proportional to the degree of tension of the spring which drives it in the course of its drawing together.

When the series of hammers, which are to act automatically, are not on escapement, the tension springs of these hammers hold them right up to the strings; nevertheless allowing them to vibrate easily. This can be readily understood if one imagines that these hammers supported against a stop bar, adapted to that end.

The speed due to the movement of the lever and tension of the spring combined with the mass of the hammer and the elasticity of the arm, allows it to strike the string strong enough to produce its sound. In the systems with double series of hammers, the automatic mechanism, the escapement is absent.

When the same series of hammers is used for both purposes automatically and mechanically, they are singularly arranged as pianos usually are made; in fact, one has an advantage over the other system, which is precisely that of the improved escapement over the ancient mechanism of the piano.

In this case to make use of a cylinder the springs must be directed to the strings by a system which can only be done by raising likewise the corresponding dampers.

It follows that, during the lifting of the lipped lever the hammer withdraws from the string right up to the time that the escapement takes its place at the nose of the trigger and

just as soon as the lips escape, the hammer is impelled as by the finger in escaping in the ordinary manner.

The degree of force of the blow given the string is here given by a spring whose tension acts in the same direction as the pressure of the finger on the key.

The different systems employed for the automatic execution of music on the piano systems, which I have just described, are far from presenting the results expected for them. They are all imperfect, subject to derangement, and producing a musical rendering, much inferior to that obtained mechanically on the pipe organs or vibrating reeds. It is that they present all the faults inherent to their peculiar structure, faults which the methods used will not succeed at all in destroying. It is in pointing out these faults, and it is hardly likely that the semi-quaver can be produced. The movement to impart to the cylinder or spiked board acquires a resistance because of this fact that it is not slow or in fatiguing the performer. The lips break, the pins wear out rapidly under the pressure of such striking and all music becomes impossible to render. If these inconveniences are to be done away with, it can be done only by diminishing the tension of the springs; that is to say, in enfeebling considerably the effect of the shock and accordingly the intensity of the sound.

Second, we all know that in the piano there is for each hammer a corresponding damper, which dampens the string just as soon as the stroke has been given, so as to prevent the prolongation of sound for a much longer time than the

Fig. 1

Fig. 2.

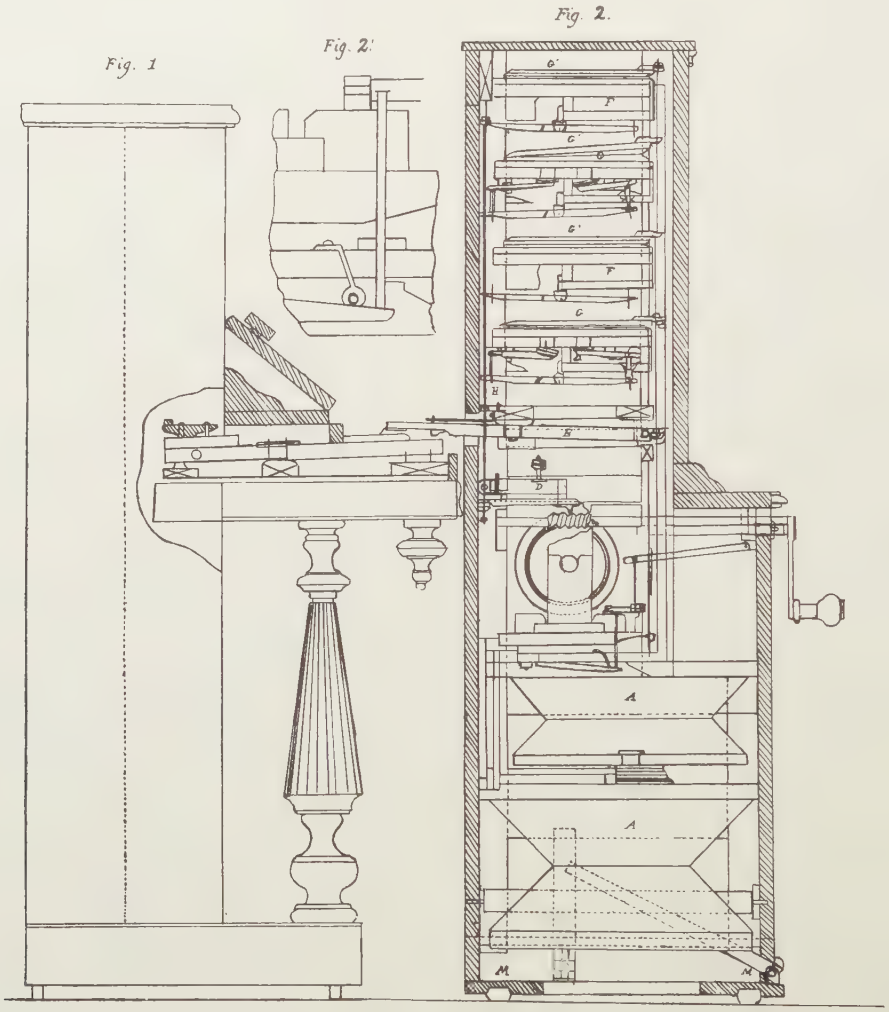

these imperfections, that the "Pneumatic Pianista" which cancels them, also presenting other advantages unknown until then, can be properly appreciated. It will suffice it to name some few of these faults, or at least the principal ones, to the end that my mechanism may be fully appreciated and understood.

First, the strokes of the hammers being dependent upon the tension of the corresponding springs, this exerts such a tension for every spring that it is obligatory to place on the cylinders or spiked strips, pins much stronger than those of the cylinders or spiked boards for organs ordinarily manufactured. Further, the striking and withdrawing of the lipped levers becomes such that it is no more possible to obtain repetition of notes, the succession of sound is slow, difficult, duration marked on the music permits it, with the known methods of automatically rendering music on the piano. It isn't possible to act on the damper belonging to each hammer, that evidently depending upon the mechanical arrangement of these systems on account of the inverse movement, which one is obliged to give directly on the hammer to allow it to strike the string immediately.

In the ordinary pianos, when the key is pressed down, the damper is raised and the stroke is immediately given; that is to say, that the movement of the hammer takes place in direction inversely to that of the damper, the latter producing an effect contrary to the former.

The ordinary automatic system demanding that the hammers be close to the strings in order to be able to withdraw

themselves from them during the lifting of the lipped levers, the whole length which they must traverse in rushing to their striking points with the result that the dampers, whose movements are connected with those of the hammers are lifted at the precise moments when they should be lowered. Thus when a lipped lever strikes the point of a cylinder, the corresponding hammer recedes from the string. On the other hand, the damper approaches it (inverse movement).

When the lip lever has finished its descent, the hammer is flung against the string against which it dwells until a new point on the cylinder comes to strike the lip of the lever, and the damper after having distanced itself from the string remains raised until a new distancing of the hammer takes place.

If it were possible to obtain the stroke in the ordinary systems during the raising of the lip, then acting in the manner of the natural touch, hammers and dampers would behave exactly as in ordinary pianos, but we have seen that it is not possible to obtain this stroke, except by using the fall of the lip.

Various means have been devised to obviate this grave inconvenience which prevents the proper rendition of music of all kinds, because of the dischord resulting from the simultaneous vibration of all the strings. Some parties employ a sort of general damper (sometimes two or three) susceptible of being partially raised after each stroke of the hammer. But besides that such a system can not harmonize with the excellerated succession of notes. It is entirely ineffectual to dampen every string because of the inequality of the pressure which they bear under the general muffling. It was necessary to adopt, as it were a pull at the side of each string equivalent to the pressure of the individual dampers, something which would present in assembling a difficulty quite considerable, and which would be far from agreeing with the exigencies of the music.

Another method consists in acting on a series of dampers for each string by the arrangement of the noting and pegging of the cylinder, each sound responds to a double pin, one of which determines the movement of the hammer in the manner I have described, and the other that of the damper.

It suffices to describe these methods to grasp all the difficulties and complications.

Finally it has been also thought of arranging the hammers in such a way that in striking the strings they should also act by their stroke on the damper levers placed in such a manner that they do not fall instantly on the strings, so as to give them a sufficient duration. But this last scheme presents the grave fault of dividing the force impressed on the hammer and accordingly that of the sound, and not being able to accord to the values demanded for the different durations of music values which are given on the ordinary piano, not, it is true, by a continuation of sound equally intense, but by the vibration of the string which can vibrate as long as the finger depresses the key.

Because of the two serious faults which I have just described, it must be admitted that it is impossible to give any expression to music; in fact, all the strings have a constant pressure, and if one obviates these by the manner of pegging in setting the cylinders or stakes points of varying heights, so as to have strokes stronger or weaker, one then comes upon other complications, the results of which are very imperfect, because one finds himself strongly dependent upon the infinitely small differences among the lengths of the pins, these having scarcely four millimeters or more of pipe. If the height of the pins is to be increased, it will be necessary likewise to increase the diameter of the cylinder, which becomes another embarrassment. It is to remedy these faults which render entirely imperfect the performing of music automatically on the piano that I have devised the pneumatic pianista.

We have seen that in the automatic system the action of the hammers took place during the lifting of the lip-levers contrary to the action of the valves in the organ where the music can be perfectly executed. But this mode of action is necessary for the blow indispensible for the production of sound on the string, that further it causes in consequence the suppression of the dampers for each string. The problem resolves itself naturally as follows: Find the mechanism such that the hammers are impelled with the shock or blow (that there be a stroke), in the first movement of the lip-levers in their rising, so as to act at the same time on the dampers in the manner of the touch on the ordinary pianos. In one word, a mechanism replacing completely the action of the finger on the keyboard of the piano.

But the lifting of the lip taken as the movement before it has served to produce the percussion has not enough speed to obtain from it the necessary blow. How shall we give it this quickness and bring about that the effect communicated to the hammer shall be identical with that which results from ordinary escapement?

Nothing more simple for all that, when embodying a foreign intervening agent whose force shall not be the cause of resistance when lifting the lip levers as the strings I have spoken of, but shall be only because of power and acceleration of speed for the percussion of the levers when the lip levers are raised. This foreign agent exists, it is the pneumatic bellows, a motor whose use is well known in the pipe organ, where it is employed to overcome the resistance of the mechanism intervening between the keyboard and the valves of the windchest and by and through which the playing of these grand instruments has been rendered as light and delicate as that of the piano.

The agent known there remains the function again nothing more simple, but like all simple problems there is nothing which escapes the mind more easily. The projection of the hammer not being possible to obtain under the conditions necessary for the production of sound by ordinary means, there is found in the pneumatic motor a powerful intermediary for the augmentation of the speed and the production of blow on the string and acceleration of speed through the distance which its lever can easily traverse without increasing the resistance on the lip-lever, a distance which can be varied to meet requirements, the stroke through the effect due to the introduction and the immediate action of the air on the surface of the pneumatic lever is an action which we can call instantaneous as we all know, seeing that the most rapid strokes can be made on the organs provided with this pneumatic system. Thus between each lip lever, which receives the first action of the pins on the cylinder or spiked board and its hammer there will be found an intervening pneumatic motor obliged to give force and speed to the striking movement of the hammer. As it is with the use of compressed air that these pneumatic levers functionate, a bellows agitated either by the feet or by handle or by a spring mechanism or in any other manner can be

Fig. 2.

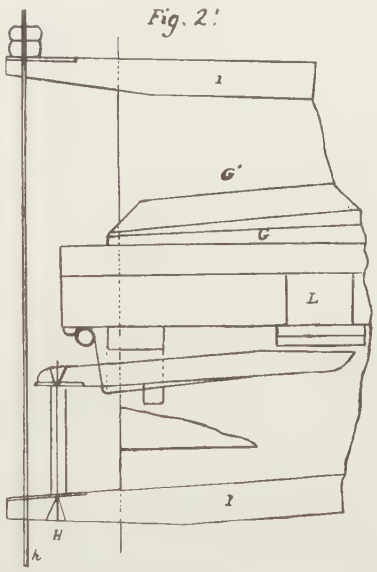

adapted to the piano or the apparatus, if the mechanism is placed on the inside or outside.

The principle on which the invention rests consists chiefly in the employment of a pneumatic motor to act whether on the keyboard of the piano or directly on the interior mechanism, according to whether the apparatus, the part of the piano or distinct. Properly speaking, it is an apparatus which can be applied to any piano whatsoever. In case the pneumatic lever acts on the key, this mechanism is closed in a small case entirely independent of that of the piano, a case which it is enough to place before the keyboard of the latter when one wishes to play automatically.

Fig. 1 is the independent piano seen in profile. Fig. 2 is the pianista in profile. Fig. 3, a section of the apparatus seen in front. Fig. 2 and 2′ are details. A are bellows designed to furnish compressed air to the pneumatic levers working by aid of the pedals B as in ordinary harmonians. C is a cylinder on which the music is marked. D is a keyboard of the cylinder, a series of lip-levers, d, d, d, which

Fig. 3

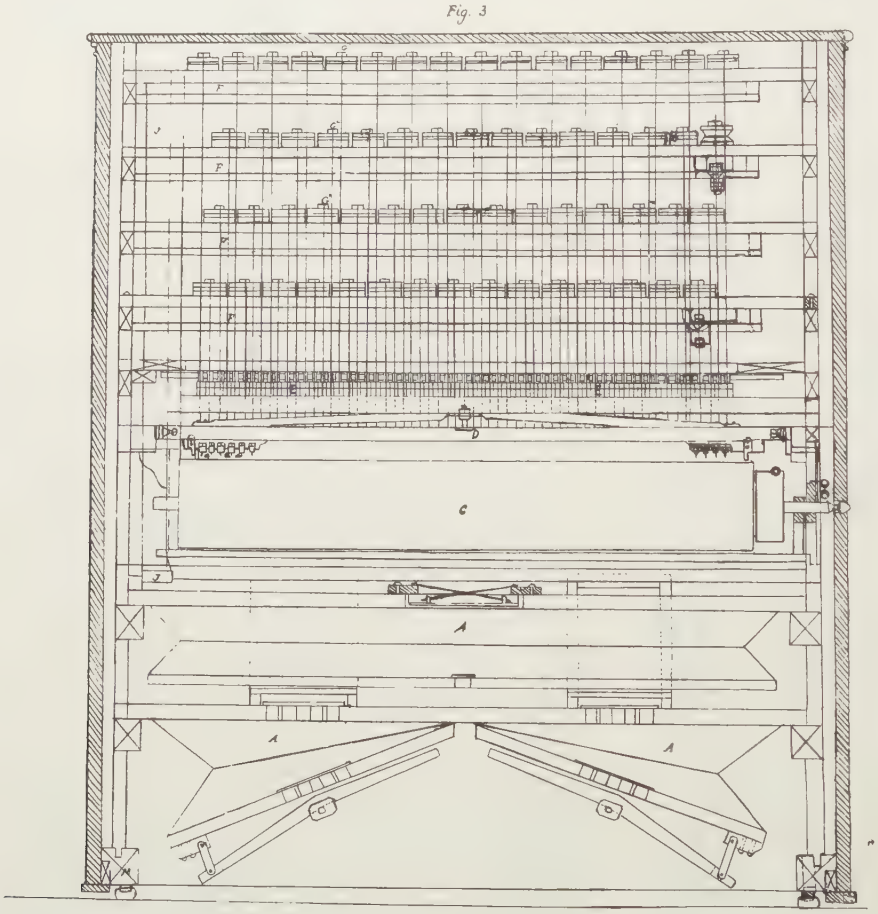

are raised by the action of the pins of the cylinder. E a keyboard upside down, or series of balancers (levers of the first class) exactly corresponding to the piano keyboard P, Fig. 1.

These balancers fill the office of the fingers on the keyboard of the piano and behave like them in striking the keys.

F, four windchests superposed on one another on which are placed at equal intervals the pneumatic levers G, thus forming four series.

The size of the pneumatic levers supporting that of the ordinary division of the piano keyboard and likewise that of the keyboard of the cylinder, it was necessary to arrange these in different elevations in order that the drawbars fixed at their center and which must transmit the motion of these pneumatic levers to the balancers E may correspond to the division of those to the extremities of which they are fixed by the screws in e; and in order that the other draw bars H, which act on the levers fastened to the windchest and which follow a division corresponding to that of the pneumatic levers can similarly correspond to the divisions of the cylinder keyboard. These draw rods fastened to the ends of the lip-levers by screws en h have for their duty the transmitting of their motion to the levers I.

The draw rods H pass the balancers E in going through the opening which are made in g to abut on the ends of the lip levers d, and at the corresponding ends of the levers I. By this means the balancers E can increase their function freely without being impeded by the movements of the draw rods.

The levers I serve for the introduction of the compressed air which communicates freely between the reservoir of the bellows and the layers of the windchest through the wind pipe J into the pneumatic levers G.

Here is how the action is performed?

As soon as a pin of the cylinder strikes the lip of the corresponding lip, the draw rod which is attached to its end at h, acts on the lever I, and this on the top K by means of the rod K, at the same time that the lever I is depressed. The valve of escapement I closes and the compressed air finding an outlet through the orifice of the valve I rushes into the small bellows, which constitutes the pneumatic motor, properly speaking.

The air then exerts its pressure on the upper surface G′ of the pneumatic motor to which the draw rod is attached at e′. This then raises the balancer at its end at e, and the motion imparted by the compressed air to the pneumatic lever is immediately transmitted through the other end of the balanzer to the corresponding key of the piano. All these various motions are made in the movement of the raising of the lip-lever.

The intensity of the action of the balancer E on the key of the piano depends simply on the breadth of the surface of the pneumatic motor, of the path of this motor and of the pressure of the compressed air, all elements which one can increase or diminish without difficulty, and which are relatively independent of the existence of the lip-levers on the cylinder pins. Now, as soon as the lip-lever escapes the cylinder pin, the valve K closes and the valve I opening again allows the air contained in the pneumatic lever to escape, which it does instantly by reason of the hole in the valve adapted to produce the fulcrumed lever E, which follows the movement of the pneumatic lever lowered at the side of the draw rod H′ is raised at the other and lets the piano key resume its normal position.

The escapement valve I is placed in such a manner that it shuts a little before the valve K finishes all its motion, something which is easily done by adding a little more length to the rod between the lever to the escapement valve.

To prevent the escape of air from the windchest F all the valve rods opening in it are covered with a washer. The part in front of each layer adapted to enable the inspection

the series of opening valves which are found thus assembled.

The general mechanism of the "Pianista" bellows, cylinder, balancers, connecting with the piano keyboard, pneumatic levers all are shut in an independent casing or in a space made one with the piano.

In order that the apparatus can be applied to all pianos whatever be the height of their keyboard, four screws supports M are placed under the case and can be raised or lowered at will in a way to bring the balancers to the keys of the piano keyboard to the distance indicated in Fig. 2.

A system of returning levers is likewise applied to the "Pianista" for actuating the "forte" and pianissimo pedals on the piano. It is optional to employ for this effect either the dampers or knee swells.

The effect of expression (strong passages or weak ones) is easily obtained by aid of a damper which closes a valve interrupting the passage of air from the bellows pumps to the reservoir. The whole of this mechanism is identical to that employed in ordinary harmoniums to give expression.

One will concede in fact, that the compressed air coming directly in the layers of the windchest without being modified by a pressure reservoir almost constant that the action of the last will be proportional to the pressure of the compressed air in the layers, a pressure which can be augmented or diminished by the pumps moving faster or slower; that is to say that acting in the same manner in the bellows as in the harmonium, one obtains the strokes of the hammers more or less intense and, therefore, sounds more or less powerful. This expression is obtained still easier by aid of a small bellows, compensator, intervening and closing a hole situated in the windpipe of the bellows for the layers, a bellows, analogous to that which I use in the perfected organ patented Aug. 19, 1857. It is enough to apply on the bellows a flexible spring which could be easily distended by means of either a damper or lever placed to that effect.

THE Fourneaux patent of 1863 has been quoted, discussed and commented upon more than any musical instrument patent ever issued either at home or abroad, and has generally been regarded and set forth as the fundamental and basic patent upon which rests the present automatic musical instrument industry. But nothing could be further from the truth for as a matter of fact it is simply a cylinder or barrel organ attachment and is in no way adapted for use in connection with the perforated music sheet, as evidenced from the following from the Fourneaux specification itself:

"Properly speaking, this mechanism is not a system for the crude translation of music; in a word, it is not a new kind of cylinder, nor of peg boards; *nor of perforated card in imitation of Jacquard's.*"

"It is, properly speaking, a complete new machine for playing the piano with the aid of a *cylinder,* spiked board or Jacquard tape, and while my invention is applicable to either of these processes. *yet the object of this mechanism shown and described comp ises all the parts intervening between the cylinder, or spiked strip and the instrument.*"

In other words, what Fourneaux claims as new and what he has shown and described is the improved intervening mechanism lying between the pinned cylinder and the sound producing mechanism which intervening mechanism consists of the pneumatic system shown and this mechanism might be employed in any one of these ways namely in connection with pin cylinder, spiked board or Jacquard tape. But no perforated sheet is either shown, described or claimed by him, nor is it clear how it could be employed in connection with the mechanism shown, without a resort to invention. Therefore, I repeat that this invention is simply and solely a pinned cylinder attachment for actuating the keys of a piano or organ, and as such was neither new or novel and, therefore, has no right to appear in this connection or in any discussion that relates solely to perforated paper musical instruments and it is incomprehensible how men claiming to be expects in the art could have been deceived by the appearance of this clumsy contrivance.

The design and only design of this invention was to substitute a pneumatic system for the old-time pinned cylinder action, and thereby obtain a more prompt or instantaneous blow or "shock" as the inventor uses the term, whereas, the pinned cylinder, while all right for Reed or pipe organs, whose movements were uniformly slow was not quick enough to vigorously actuate the hammer of a piano. So instead of the pins in the cylinder acting directly upon the key levers of the piano, the pins indirectly opened and closed a series of valves to the pneumatics, so that the advantage, of this invention, and its only advantage consists of a quicker movement of the hammer toward and away from the string than was possible by means of the pinned cylinder acting directly on the levers of the piano key. But this invention is not governed by a perforated sheet, and, therefore, has no right to appear in this relation. Notwithstanding it has been set forth as a perforated paper instrument in all previous discussions of the player problem, and even the inventorship of the player had been credited to Fourneaux on the strength of this patent, and, therefore, has been used to deprive others of the honor due them, it having been classified with a list of patents and inventions known to be perforated paper instruments by the author of "Pianos and Their Makers." But be it understood that from this time on that this invention cuts no figure in this controversy and that the statement of the author of "Pianos and Their Makers" to the effect that "in 1863 Fourneaux invented an automatic musical instrument operatable by a flexible music sheet" had no foundation in fact, except as shown and described in this invention. And if ever there was an instance of much ado about nothing, this invention represents that instance.

The Bain invention, while radically differing in form and construction from the Seytre invention, nevertheless does not introduce any additional elements. The only thing shown or described is the sheet, the system of rolls and sound producing devices, all of which were first shown and described by Seytre. Bain is followed by Dawson and while Dawson's drawings and specification are very full and complete and the construction widely different from that of Bain, yet he introduces no new elements, the number of such remaining exactly the same, namely, six.

Next in order comes Hunt & Bradish, but no additional elements are disclosed.

And following Hunt & Bradish comes Pape, but this invention cannot be regarded as a player or any part of a player. It is simply a mechanical device, an attachment for actuating the keyboard of the piano, and does not come under the present heading but constitutes a new department.

Following Pape in the regular order of progression comes Fourneaux, but as before stated this is not a perforated paper instrument, and hence has no place in this treatise, as the fundamental principles and basis upon which this work rests and upon which we build is the

perforated music sheet, and the absence of the same in an invention or patent properly excludes it from consideration in this work.

Regarding the Pape device while that contains a perforated sheet and is, therefore, eligible to appear in this relation, yet it is not a musical instrument in and of itself like the player but merely a keyboard attachment for the piano, something regarded at the present time as obsolete and, therefore, represents an entirely different class of invention which will constitute a separate department of this work to be treated under a different heading.

Were we to follow the patent record the next in order according of date would be the Van Dusen patent of 1867 but the patent office is not always to be relied upon in these matters and as a matter of fact John McTammany comes next by reason of the evidence adduced before the commissioner of patents, McTammany having clearly established the date of his conception of the player mechanism as 1866, one year earlier than Van Dusen.

But the modern player reduced to the minimum contains fourteen elements or just double the number shown or described in all the patents analyzed up to date including the Morse, Seytre, Bain, Dawson and Hunt & Bradish, only six of the fourteen elements appearing in any one patent or all of them combined for that matter.

We have now reached the stage where we know just what has been invented and by whom, and what remains to be determined is the question of the relative value of each invention. Seven patents in all have been referred to and fully illustrated up to date. No importance was attached to the Morse specifications of 1731 and the only honor due Morse is that of being the first to suggest the control of an organ action by means of a perforated device. But he never showed, illustrated or described how such an instrument could be constructed.

Seytre in his patent of 1842 goes further and illustrates and describes a mechanism for the purpose of producing music by a flexible perforated sheet and said mechanism comprised the following elements which are common to the modern player, namely: The perforated music sheet, means for feeding the sheet, bellows, an action, sound producing devices—five elements in all. The first two originated with Seytre; the latter were previously combined in various instruments prior to Seytre's time. Thus we have five elements embodied in his invention of 1842 that are common to the modern player-piano.

In the case of Pape and others much time and space is taken up in speculating about expression and fine tone shading, even to distinguishing between the power, loudness or softness, in the individual elements of a chord, when, as a matter of fact all of them combined had not built even a foundation upon which to erect the most primitive sort of an automatic musical instrument. They began to put on the ornaments before they had built the foundation; got the cart before the horse, as it were, which simply goes to show how crude the idea was at that time and the mental and mechanical confusion that prevailed among the experimenters of those early days.

Fig. 2

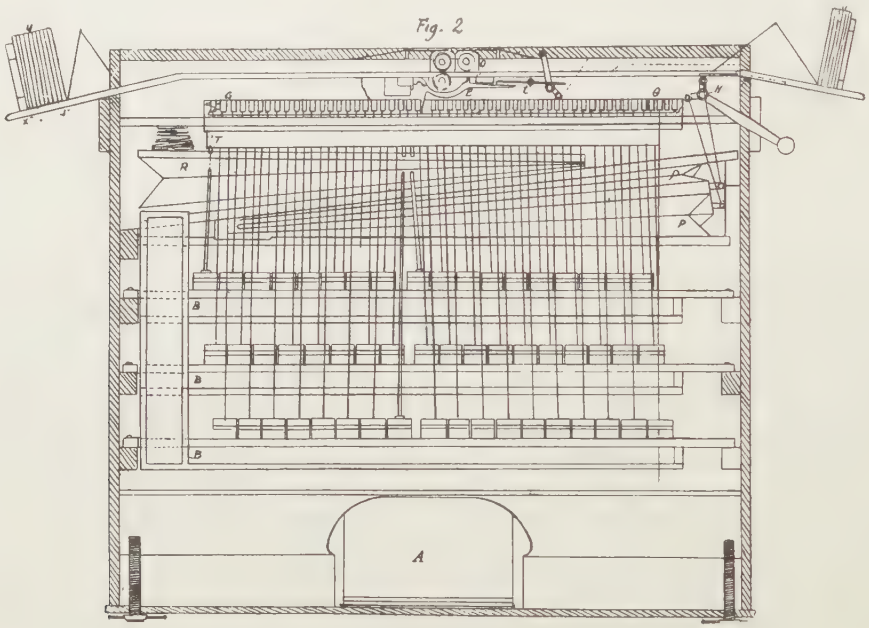

Translated from the French.

FOURNEAUX.

Certificate under date of Aug. 9, 1871.

The improvements which are the object of this addition to my original application of 1863 consist first, in the new position given to the set of small bellows or pneumatic levers which are now situated in the lower part of the apparatus instead of being in the upper portion as shown in my patent of 1863. This alteration causes a notable diminution in the apparatus, the diminution being such that the height of the cabinet is almost on a level with the keyboard of the piano and does not hide the front of the instrument as formerly.

2d. In substituting for the cylinder, the use of the Jacquard cards, the employment of which I spoke of briefly in my 1863 patent. With this method of musical reproduction there are small metal keys whose beak or noses penetrate the holes of the cardboard in order to make the relative keys of the piano sound, to accomplish this, these small keys are constantly pressed down by the action of corresponding

springs, which tend to cause the beaks or noses of these small keys to penetrate the hole or perforation of the card as soon as there is a coincidence between a beak and a perforation during the passage of the cards under the beaks. The holes made in the card have their lengths corresponding to the musical intervals such as I obtained previously by the use of the ordinary cylinder. The keys of the piano remaining bent down the entire time that the lips of the small keys are in the holes of the card. The dampers of the piano in this way remaining elevated. One obtains thus the exact musical duration by the relative prolongation of the sound. The cards receive their movement forward by means of two wheels covered with rubber between which they pass, and where they are pressed forward.

The wheels are rotated by a crank or handle. This last also actuates the supply pumps of the main bellows, the same way as this is done in the so-called wheel or street organs.

The beaks of the small keys are guided by a metal comb placed level with the upper board of the apparatus and whose teeth separate the beaks from each other. Now in order that the card having been emitted from between the two rubber-covered wheels when it passes above the beaks shall not give way under the action of all the springs, which act on the small key, and in order that it rests entirely on the comb it is necessary to use above this and at a distance

Fig. 3.

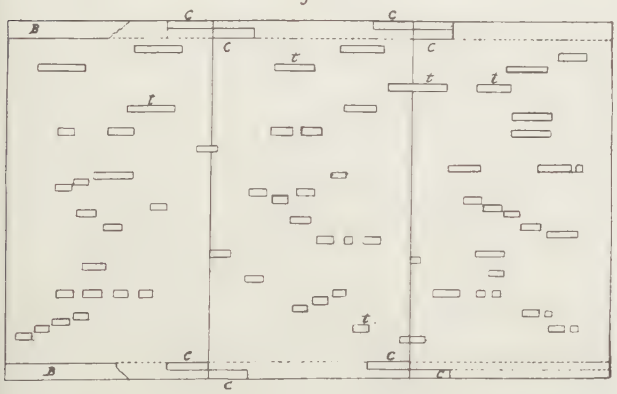

equal to the thickness of the card, either a plate having holes corresponding to the beaks and full spaces corresponding to the teeth of the comb or a metal cylinder with circular grooves among which the teeth can enter the card, passing thence between the comb and the plate with holes on the cylinder with grooves is supported and the full parts of this plate or cylinder which are between the beaks and which correspond exactly to the full parts of the comb prevent the card from receding in the time between notes at the moment when the beaks redescend.

The division of the small keys which penetrate the holes of the card being on one side much narrower than that of the pneumatic levers which correspond to the division of the piano keys, and on the other side situated perpendicularly to these the transmitting of the movements of the small keys to the mechanism of the small bellows is obtained by means of a series of short rods which serve to adapt these movements to the division and position of the pneumatic levers.

Thirdly, in the connection of jointing of the Jacquard cards by means of double inverse hinges pasted or fixed on the margin of the card in order to make these entirely continuous and to permit the forming pieces of music of all lengths whatever.

Fourthly, in placing for every piece of music the cards in the form of a book or volume and folded in small leaves of equal dimensions.

Fifthly, in method of joining the tape applicable chiefly to the figures of quadrilles, each and all of them to be repeated without interruption, a method consisting in hooked nippers which serve to join the two ends of the card which forms the ends of the perforated music sheet.

Sixthly, in the use of shelves added to the apparatus and whose position slope and proportions are disposed and calculated in such a manner that the card can unfold and refold without interruption or without false play and without its being necessary to give any attention while the handle is being turned.

Seventhly, in a new disposition of the discharge valves of the small bellows or pneumatic levers, which valves are shown on the outside in the design of my principal patent but are now placed inside in cavities made in the increased thickness of the lower boards of the small bellows, this modification results in the simplification of the mechanism of pneumatic levers and renders their action still more prompt than any I have obtained until now.

Fig. 4

Eighthly, besides these various improvements, alterations and additions which I have just described and enumerated, I reserve for myself exclusively and expressly the right to employ the pneumatic levers in an inverse manner. That is to say by using the rarification of air instead of the compressing. With this new method the main bellows and the small bellows or pneumatic levers remain open in their natural position, while with the ordinary system of compressed air which is employed in the "pianista" shown in figures 1 and 2, the main bellows and small bellows are shut and opened only under the action of the compressed air.

The pumps of the main bellows agitating so as to obtain the inverse pneumatic effect would then have for a function no more the condensing and compressing of air in the confines of the large bellows, but the maintaining of a rarification of air within its confines, to the end that the reservoir may be held open by means of a spring, and it would suffice to turn upside down the windchest of the pneumatic levers in order that they should remain open naturally by their own gravity.

The manner of operation each small bellows will operate as soon as the inlet valve of a pneumatic lever should open the discharge valve and would close by the same movement, the air held within the small bellows woud rush into the rarified interior of the large bellows to place itself in equilibrium with the density of the air confined in it and the external air acting on the outer surface of the small bellows and finding itself denser than the air held inside of it, pressing down on that surface and causes the pneumatic lever to shut immediately. In closing this acts on the corresponding piano key and makes it sound.

Thus with the use of the inverse pneumatic method the function of the small bellows would be closed by the ef-

Fig. 5.

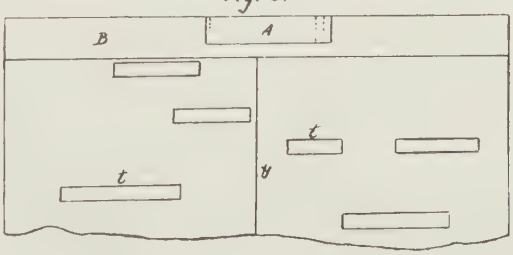

fect of the rarification of the air held inside of it, while with the use of the direct pneumatic method their function is to open by the opposite effect of condensing and compressing air inside. But as can be understood these two pneumatic methods are only really two different aspects of the same fact, to wit: in the direct method the difference in the density between the external air and the air inside of the bellows more dense than the other and in the inverse

mode the difference in density between the external air and the air inside less dense than the other.

The whole mechanism conforming with the inverse pneumatic mode would be perfectly similar to that which is shown in the present addition, whether the windchest of small bellows are placed upside down so that they remain open naturally or whether the windchest are left in the position they occupy in figures 1 and 2, being content to put in the small bellows, weak springs to hold them open. In each case the alterations of the mechanism consist in the inverse position given to the oblique arms of the short rod linkage in stakes substituted for the draw rods and in levers for reversing the motion.

I have appended to this additional application a design which represents the "pianista" with these improvements,

Fig. 1.

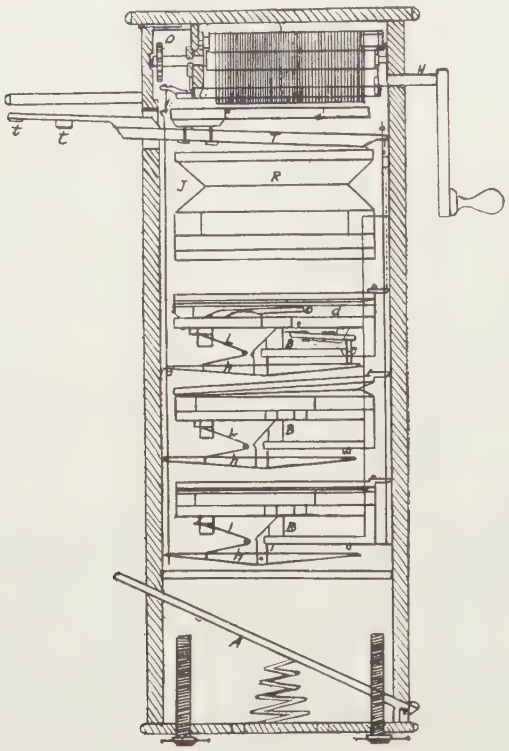

alterations and additions which I have just described, if the system of hinges and hooked clasps, which I use for the joining, articulation, continuous succession and fastening of the cards. Figure 1, "pianista" seen in profile.

Figure 2, apparatus seen from in front. A, pedal communicating with the foot pedal of the piano by help of an elongation made on it so as to obtain the effects of forte at will. B, B, B, wind chest of the small bellows or pneumatic levers. C, inlet valve. D, discharge valve of a pneumatic lever placed in a cavity made in the lower board of the small bellows. P, P, supply pumps for the main bellows, set in play by the cranks jointed to the shaft end of the handle and compressing the air in the reservoir R.

T, series of large keys corresponding to the keys of the piano and whose extremities T T are placed above the keys of the piano. E, series of small metal keys whose beaks must enter the holes of the card whenever they coincide and are guided by the comb E.

G, series of short rod linkage by means of which the small keys communicate their motion to the inlet valves of the pneumatic levers by means of the draw rods (I) at the right and at the left of the stake.

F, of the returnable draw rods J, and finally of the beams H. The return draw rods J are jointed and hooked at K to allow the upper mechanism to be removed easily without being obliged to touch the ruling.

L, L, L, springs with a constant tension on the draw rod J and whose elastic action communicating by the rod F or the rod I of the short rod linkage to the small keys E always tends to make the beaks go out above the level of the upper board of the apparatus to penetrate the holes of the card.

N, N, rubber covered wheels between which the cards pass. Q, pinion on the shaft of the lower wheel M, receiving its movement by means of a Vaucanson chain from another pinion placed at the end of the shaft M of the handle.

O, metal cylinder with circular grooves corresponding to that of the comb E and among which the beaks of the small keys E penetrate.

S S, springs of pressure on the wheels and grooved cylinder U. A wheel for lowering all the keys by means of a lever V, whenever it is desired to disengage the card from under the grooved cylinder.

X X′ shelves for the unfolding, folding and succession of the cards. They are jointed at Z and Z′ to allow them to be shut inside of the case of the apparatus, Fig. 2. These shelves can be made entirely movable and to be lifted away from the apparatus. In that case the joint at Z would be replaced by a system of grapples.

Y, card folded in the form of a volume which is placed on the shelf [of departure] X, to unfold, slide over the upper board of the apparatus, pass between the wheels N and N′, between the comb E and the circularly grooved cylinder O and finally refold itself in a volume at Y′.

Fig. 3 represents three cards folded and jointed shown half the natural size.

C C, double inverse hinges pasted on the margins of the cards and folding it between them in order that the cards join each other well when they are open so as to preserve intact the division of measures and to render the action entirely continuous, some small grooves of the thickness of the hinges are made at the borders of the cards at the place of the joints.

Fig. 4 and 5 represent a card natural size seen in profile and in front. This card, whose face is partly shown in Fig. 5, is cut at M in two parts, which are fastened and reunited by the aid of two hooked clasps A, placed on each side of the card. These hooked clasps are fastened to one end of the card and to join it to the other side it is only necessary to make it enter at the ends between the hooked clasps in such a manner that the stops of these penetrate the notches made at E in order to join the two ends of the card.

The hooked clasps serve to join the two ends of a piece of music placed to form the two parts of the same card when joined, which makes the piece endless and can thus be repeated without interruption. T, T, T, Figs. 3 and 5, holes made in the cards agreeing by their varying lengths with the musical durations.

B B, strips of paper pasted on each side of the margins of the cards to conceal the hinges and to make them stronger. All the cards have the same dimensions so that being folded they have the aspect of a volume taking but little space and being handled very conveniently.

THE VAN DUSEN PATENT OF 1867

WE have now reached the stage where we are confronted with the Van Dusen patent, No. 72,129, dated September 10, 1867, and after a careful analysis of its mechanism we find that it contains but three elements, common to the latter day player, namely—the perforated music sheet, the means of feeding the same and the secondary or striking pneumatic, the latter or third element being new for while broadly speaking the McTammany player of 1876 shows a pneumatic action; that is an action governed in its operation by wind from the bellows, yet it did not contemplate an individual pneumatic for each key. On the other hand, the Van Dusen device does, and therein lies its importance in this connection, it being the first instance in which the sheet and striking pneumatic are combined in an instrument or an attachment for a musical instrument operable with a perforated music sheet. And it is this latter feature that rescues this patent from oblivion as the other two elements of the combination, namely, the sheet and means for feeding it were embodied in the patent of Seytre. But the Van Dusen patent does not relate to a self contained musical instrument as neither reeds nor strings are shown nor described. Reference is made to the key lever T, and assuming such to represent the key of an organ or piano, then in that event this invention belongs to the department of keyboard attachments such as the Pape, Fourneaux, McTammany, Gally and other cabinet players that might be mentioned.

But the reader may demurr to my crediting the secondary or striking pneumatic to Van Dusen, in view of the Fourneaux patent of 1863, which it is admitted embodied a striking pneumatic. But the Fourneaux device did not employ the perforated sheet to govern the action thereof. On the contrary it employed a pin-cylinder that usurped the function of the perforated sheet and, therefore, consigned the Fourneaux invention to the orchestrion and cylinder music box class with which we have nothing to do.

United States Patent Office.

George W. Van Dusen, of Williamsburg, New York. Letters Patent No. 72,129, dated December 10, 1867.

IMPROVEMENT IN MUSICAL INSTRUMENTS.

The schedule referred to in these Letters Patent and making part of the same.

To all whom it may concern:

Be it known that I, George W. Van Dusen, of Williamsburg, in the county of Kings, and State of New York, have invented new and useful Improvements in Musical Instruments; and I do hereby declare that the following is a full, clear, and exact description thereof, which will enable others skilled in the art to make and use the same, reference being had to the accompanying drawings, forming part of this specification.

The present invention relates to arranging musical instruments in such manner that by the passage of a perforated surface or surfaces, the notes of the instrument may be permitted to sound or be sounded in such order as may be desired to produce a given tone; and the invention consists in a novel connection and arrangement of levers and valves between the plane of movement of the perforated surface or surfaces, and an air-chest or chests, and the keys or levers for opening the valves to the reeds, or for operating any other mechanism suitable for producing tones, whereby through such perforated surface or surfaces the mechanism forming the connection between the perforated surface and the sounding-mechanism will be operated through its perforations to produce the sound, or note, or notes desired, of whatever length such notes or sounds are to be. In the accompanying plate of drawings my improvements in musical instruments are illustrated—

Figure 1 being a plan or top view of the same, and

Figure 2 a vertical section taken in the plane of the line *x x*, fig. 1.

Similar letters of reference indicate like parts.

A, in the drawings, represents an air or wind-chest, secured at each end to and between uprights B. C, a passage through air-chest, made of a right-angular shape, to which at one end, D, any suitable apparatus for producing a suction in the air-chest A is to be connected with the other, provided with a tube or pipe, E, that at its upper end is closed by a valve-plate, F, secured to one end of a lever, G, hinged to the upper side of a rail, H, in proper position therefor. This valve-lever G is thrown up by a bent spring, I, suitably arranged therefor. That portion of the air-passage in the air-chest having the tube E is extended down through the air-chest, where at its lower end it is enlarged or bored out, forming a chamber, J. This chamber J is closed by a flexible diaphragm or plate, K, which is secured to the outside of the air-chest by a ring, L, surrounding its edge, secured by screws M or other proper fastening devices. N a stem, passing through center of diaphragm K, on and in which it is secured, so as to be a part of the same, by means of a screw-nut, O, screwed upon its outer projecting portion, P, between which and a shoulder-plate or disk, Q, in the chamber J, the diaphragm is confined. The stem N projects up into the extension to the air-passage of the air-chest, and around it, within the chamber J, is suitably arranged or placed a spiral spring, R, to bring back the diaphragm to its place after its operation, as will be hereinafter described. Below the outer end to the stem N is placed a key or lever, T, arranged or hung to move in a vertical plane, with which key or lever it is intended to connect any suitable arrangement of mechanical devices, as, for instance, such as are now in use for producing, or causing to be produced, musical notes or sounds, whether by means of reeds or of strings, or otherwise. U a rail, fixed in position over the valve-levers, hereinbefore referred to. This rail is to carry and support a series of horizontal levers, V, each turning or swinging upon upright pins or

fulcra, *a*, with the longer arm W to the levers projected and extended over the valve-plates F, on which they rest, through adjustable screw-pins or studs *b*. X the short arms to the levers V, each of which at their outer ends is provided with a downward bent metallic finger-piece or point, Y. Z, bent springs, arranged to bear upon the upper side of finger-levers

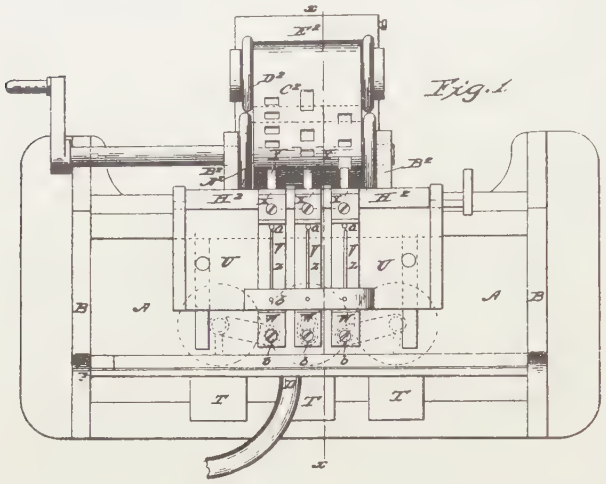

V. A^2, a drum or roller, arranged to turn in suitable bearings of the uprights B^2. This roller extends along the line of the finger-pieces to the levers V, just below the same, and in position for such finger-pieces to rest thereon. C^2, an endless strip of paper, or other suitable sheet of flexible material, which strip is perforated or punctured in a similar manner to strips heretofore employed in musical instruments to sound the same. This strip passes around the roller or drum A^2 at one end, and at and by the other, around a roller or drum, D^2, hung in bearings of a frame, E^2, arranged to swing with a spring, F^2, applied thereto, in any suitable manner to hold the paper strip at a sufficient tension to produce the desired amount of friction on the rollers to cause it to run or pass around.

Having thus described the construction and arrangement of parts according to the present improvements in musical instruments, I will now proceed to explain the manner in which the same operate.

The perforated strip C^2 is made to pass around the rollers A^2 and D^2 by connecting the two rollers with any suitable driving mechanism, and also a suction produced in the air-chamber or chest A by means of any suitable bellows or other air-apparatus that is to be connected with the chest at D. The suction in the air-chamber causes the diaphragm K with its stem P to be drawn inward, raising it from the key T. As one of the perforations in the strip C^2 comes under a finger-piece, Y, the lever, which carries such finger Y, then moves sufficiently to raise the stud *b* from the valve-plate, G, that, then, by the action of the spring I, is lifted from the tube E, opening it to the entrance of air, which rushing through it, presses down the diaphragm K, and consequently, through its stem P, causes the key T to be operated, and thus the mechanism for producing a sound or note, the length of which depends upon the length of the perforation in the sheet. But when the perforation has passed by the finger-piece Y, it then raises the lever V to which it is fastened, thus closing the valve G, stopping the sound, as is obvious.

The diaphragm N P may be arranged to act directly upon the sound-producing mechanism, in lieu of through a key, or as above described, and I therefore wish it to be distinctly understood that I do not intend to limit myself to any one arrangement of parts between the diaphragm, stem, and the sound-producers, as this invention has no reference to such parts. Nor do I intend to limit myself to any particular arrangement or form of perforations, or their equivalents, in the strip or sheet C^2, as such perforations, &c., will depend upon the melody or tune to be executed or performed in the musical instrument.

It may be here observed that by my arrangement of parts between the plane of movement of the perforated sheet and the air-chest or passage A, and the arrangement of the diaphragm K, it is plainly apparent, that with but a slight movement to the finger-piece Y, a powerful action can be obtained upon the diaphragm stem P for actuating the sound-producing mechanism, whereby comparatively thin paper or other suitable sheet material can be used without the least danger of being injured or damaged either at the edges to its perforations or upon its plain surface. H^2 a rail, arranged under the levers to the finger-pieces Y, by turning or swinging which, in the proper direction, the said levers can be raised sufficiently to bring the finger-pieces above bearing upon the perforated sheet, when desired to remove it and to replace it with another; the rollers A^2 and D^2 are also so hung as to be susceptible of easy removal for inserting a new or different perforated sheet according to the tune or melody desired to be produced.

I claim as new, and desire to secure by Letters Patent—

The combination and arrangement of lever V, with finger-piece Y at one end and stub *b* at the other, valve G and air-

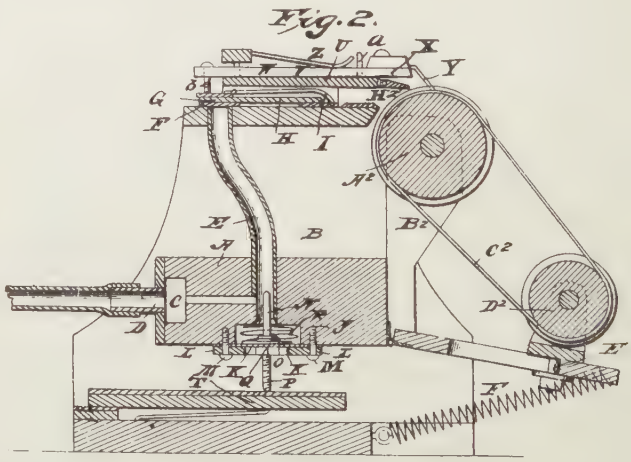

passage E closed by a flexible diaphragm, K, substantially as herein described, and for the purpose of producing, by means of air, an action upon any suitable sound-producing mechanism through the movement of a sheet or strip perforated, or in any other equivalent manner prepared.

GEO. W. VAN DUSEN.

Witnesses:
ALBERT W. BROWN,
WM. F. McNAMARA.

SCHMOELE BROTHERS PATENT, 1873

IN presenting the case of the Schmoele brothers, Henry and William Ford, I confess to some degree of disappointment in regard to their status in the patent office. I had their patent No. 145,532 in my possession for years, but although the patent office had ignored my frequent previous requests for additional patents and information in regard to the Schmoele brothers' work in relation to the development of automatic musical instruments, operatable by means of a perforated device, yet the one thing and the only satisfaction I ever received was the accompanying patent No. 145,532, dated December 16, 1873, which application was filed March 7, 1873, and goes to show that the Schmoele brothers were pioneers in the art.

Although the patent herewith represents only a fragment of an instrument, and the specifications and claims cover little or nothing, nevertheless the fact remains that much more credit is due the Schmoele brothers than one would suspect from a casual reading of the only patent in evidence and relating to their case.

I take this, the first, opportunity to bear witness to the fact that the Schmoele brothers not only invented the mechanism herein referred to, but they actually produced a workable instrument which was in evidence at the same time that the French "Pianista," invented by Fourneaux and manufactured by Thebouville Lamy was exhibited at the Centennial at Philadelphia in 1876, where the writer also put in an appearance, and these three instruments were the only things on earth at that time and constituted all there was to the perforated musical instrument industry at that period. But whether the Frenchman and the Schmoele brothers became discouraged at the writer's comprehensive scheme, embodying, as it did, all of the essential elements of the modern player, or whether they were influenced by other considerations, the writer is unable to say; one thing, however, is certain, that nothing more was heard of either of them, and this may account for their failure to even file an additional application in the patent office.

The Frenchman was unaware of the state of the art on this side and had hoped to make sales, or at least dispose of his patent rights in this country; but as a matter of fact, he did not even make an application, so that to the writer was left the whole field, not only in this country, but also in Europe.

So with this review of the Schmoele patent closes the chapter dealing with the pioneer inventors in this art, or the men who had thought or worked upon the problem, prior to 1876. If there is any one fact more than another attested to in relation to the player history, it is that the foundation of the perforated paper instrument industry dates from the year 1876 and the meeting of the parties referred to at Philadelphia, as witness the following from D. Appleton & Co.'s Annual Encyclopedia of 1885, new series, volume ten:

"Although inventors and mechanicians have been at work in this department of music for many years, progress has been slow, and comparatively little advance made since the beginning of the present century. Even until within the last decade no instrument of this kind had been made of sufficient merit to attract any considerable amount of public attention, or stimulate such a demand for it as had arisen from the improvements in musical instruments generally

"Until 1876 no great degree of popularity had been enjoyed or sale attained, by musical instruments of this kind in America, but it would appear that the opportunity afforded skilled mechanics and inventors to gather at the Centennial Exposition and obtain a knowledge of and a comparison with one another's work and ideas, was to become the starting point of a new era of progress. Among these exhibits was an electric organ made by Henry Schmoele of Philadelphia; also a French "pianist." One of the peculiarities of the Schmoele mechanism was the use of a music-sheet of double width. The slots of the music, which would ordinarily occupy only one half the entire width of the sheet, but would be very long and therefore liable to destruction, were divided. Half the length of a slot was cut in half of the double sheet and the remainder in the other half. Two sets of electric connections were used, one set beginning the notes and the other set completing them."

It follows, therefore, that 1876 was the year and player of the writer the instrument that the press of the country described and the public discussed at that time. It is not because I attached much importance to the Schmoele instrument in the form in which I saw it as any one skilled in the art can judge by the description, yet it contained elements of importance and was certainly the forerunner of the present electric department of the automatic musical instrument industry.

UNITED STATES PATENT OFFICE.

William F. Schmoele and Henry Schmoele, Jr., of Philadelphia, Pa., Assignors of one-third their right to Charles Schmoele.

IMPROVEMENT IN ELECTRO-PNEUMATIC ACTIONS FOR MUSICAL INSTRUMENTS.

Specifications forming part of Letters Patent No. 145,532, dated December 16, 1873; application filed March 7, 1873.

To all whom it may concern:

Be it known that we, William F. Schmoele and Henry Schmoele, Jr., of Philadelphia, Pennsylvania, have invented an electro-pneumatic action for operating the pallets, slides, and pedal-pallets in organs, the keys and pedals in pianos, and the beater in drums, of which the following is a specification:

Our invention consists in the use of windpockets connected with and operated by an electric action, constructed and arranged as hereinafter described.

The magnet *m* is connected with its appropriate reader on the reading apparatus described in an application for a patent on a "method and instruments for reading and performing music by electricity," filed October 12, 1872, and also with the corresponding key on an electric key-board, when this latter is inserted in the instrument for purposes of manual performance. The separate or adjunct reading-circuit described in said application of October 12, 1872, is dispensed with when the electro-pneumatic action is used, sufficient electricity for which can be passed through the thinnest metallic film or note. The magnet *m* is, therefore, placed in the same circuit with its reader, and operates its armature *a*, fastened to the short arm of the lever *ab*, at whose opposite end *b* is attached the screw-threaded wire *bc*. The primary pocket p^1 is composed of a fixed and a movable leaf, connected together by a fold or rib of kid or other soft leather. An opening, *o*, in the fixed leaf communicates with the groove *oij* in the bottom board of the wind-chest, or in any conduit containing wind, which groove, at its other end, terminates in two openings, *i* and *j*, both in line with each other, the one, *i*, entering the chest, and the other, *j*, communicating with the open air. Through these two openings *i* and *j* passes the screw-threaded wire *bc*, which swings with a free motion upon the lever *ba*, and has upon it two small nuts, *u* and *v*. The upper nut, *u*, is in the wind-chest, and is adjusted upon the threaded wire *cb*, so as to close the opening *i* into the chest when the lever *ab* is at rest. The lower nut, *v*, is in the open air, and is adjusted so as to close the lower opening when the magnet acts. Each nut has a piece of kid under it, in order to close the openings tight. When the magnet acts, the opening *i* into the chest is opened, and the lower opening, *j*, simultaneously closed, and the wind, entering the primary pocket, forces out its movable leaf. This leaf is attached, by the cord *w*, to the lever *q* of the valve *s*, which is thus opened when the wind enters the primary pocket. Attached to the valve *s* is a screw-threaded wire, *sdg*, bearing the disk *d*, which, like the lower nut, *v*, on the wire *cb*, is so adjusted as to close the exit f^2 when the valve *s* is opened. A guide for this disk *d* is formed by passing the end *g* of the threaded wire *sdg* through the hole *g* in a piece of metal bent in the shape of a U, with the perforation made in the crook or bend of the U. The secondary pocket p^2 is constructed exactly like the primary, but on a larger scale, and when the valve *s* opens, through the action of the primary pocket, the disk *d*, having simultaneously closed the exit f^2, the wind rushes into the secondary pocket, and forces out its movable leaf. This leaf is attached to whatever resistance, R, is to be worked—to a pallet or a slide in the organ, a key or a pedal in the piano, or to the beater in the drum.

The position of the secondary pockets is immaterial, as the wind can be carried to them wherever they may be placed by lengthening out their grooves, thus leading the wind in any direction desired. In organs they are best placed under the wind-chest, immediately beneath the pallets they are to work, and upright on the sides of the chest when they are attached to the slides. In pianos they are located below the keys to which they are attached, and are arranged in several rows or tiers, as the width of the pockets exceeds that of the keys they work.

The size of the pockets varies with the wind-pressure employed, decreasing as the latter is increased.

When the piano is built alone, a bellows and reservoir must be placed beneath, to supply the necessary wind. When attached to the organ, which forms a very effective and beautiful combination instrument, the same bellows supplies both. In very small organs, where the resistance of the pallets is very inconsiderable, the small pockets may be made to perform the office of the larger ones by attaching them directly to the pallets.

We claim as our invention—

1. The use or application of an electro-magnet to operate a wind pocket or pockets employed to work the valve, substantially as set forth.

2. The form of pocket and valves employed, admitting the wind by a groove with double aperture, controlled by two valves or nuts opposed to each other on a screw-threaded wire, substantially as set forth.

3. The small or primary pocket with diminutive valve to control the large or secondary pocket, which operates the pallet or other resistance, substantially as described and set forth.

WILLIAM FORD SCHMOELE.
HENRY SCHMOELE, JR.

Witnesses:
H. SCHMOELE, M.D.,
CHARLES SCHMOELE.

THE MARSHMAN & MATTHEWS PATENT OF 1878

WE have now arrived at the year 1877, during which period three patents were issued from the United States Patent Office, relating to the perforated paper musical instrument art, just as many as had been issued during the whole history of the patent office prior to that time, and in the following order:

Hunt and Bradish, joint inventors, 1849.

George W. Van Dusen, 1867.

John McTammany, 1876, although the latter antedates Van Dusen in date of conception and therefore should stand second.

The three patents granted in 1877 were issued to the following inventors:

W. F. & H. Schmoele, Electro pneumatic organ action.

Henry B. Horton, Foot pedal organ with perforated sheet.

E. P. Needham, Paper as valve instrument.

And these three and all who follow may be regarded as the new school or generation of inventors in the art, as contrasted with those who had gone on record before, or as early as 1876, and who by common consent are regarded as the pioneers in the art. But the day of the perforated music sheet organ had arrived, and as usual the man to push and exploit it had arrived with it.

While the writer was engaged in the development of the system in the West, George W. Van Dusen was laboring beneath the roof of E. P. Needham in an attempt to develop and apply the pneumatic system to the instrument, hoping that Needham would become interested and cooperate with him in the further development of the system. But therein he was disappointed and as a result he brought his experiments to an end, took out a patent to cover the same and abandoned his plans. After the writer came East and exhibited the McTammany interior player in 1876, Van Dusen again took up the work, applied for and obtained another patent of little value, then he dropped entirely out of sight.

Van Dusen was followed by Newman R. Marshman, who had stumbled upon the paper as a valuable idea of Alexander Bain, of Scotland, and he, too, repaired to Needham's factory to develop his idea in the belief that he could interest Needham in his project. But he also met with disappointment, for Needham at that time could see no money in the idea. So Marshman dropped out of the procession, and all that remained was the McTammany interior or inside player. Thus Needham knew of the writer's work as far back as 1870. He had seen the plans and was familiar with the efforts of Van Dusen, and finally he had stood by while Marshman had conducted his experiments, but even then had not caught the contagion. But when the press of the country began to refer to the Centennial and exhibits displayed there and got to speculating on the possibility, practicability, and desirability of an instrument operatable by means of a perforated sheet, Needham began to wonder if after all there might not be a dollar in the project, for nothing else ever appealed to him, for he was a man absolutely devoid of sentiment, and that was where he and the writer differed so in view of the foregoing facts. Needham was more open to conviction than he had been and was at least willing to examine my models, drawings, and plans, when I finally reached his factory, which was in the latter part of August, 1876. The building is still standing on Twenty-third street, though used for other purposes than organ building.

United States Patent Office.

Newman R. Marshman, of New York, N. Y., and Mason J. Matthews, of Boston, Massachusetts.

IMPROVEMENT IN MECHANICAL MUSICAL INSTRUMENTS.

Specification forming part of Letters Patent No. 209,492, dated October 29, 1878; application filed May 22, 1878.

To all whom it may concern:

Be it known that we, Newman R. Marshman, of New York City, State of New York, and Mason J. Matthews, of Boston, Massachusetts, have invented a new and useful Improvement in Mechanical Musical Instruments, which invention is fully set forth in the following specification.

Our invention relates to a mechanical musical instrument or toy in which is employed a perforated sheet of paper as a slide-valve to control the admission of air to the reeds.

It consists in the combination of a sheet of paper or other flexible material, perforated at suitable intervals to produce a tune or chord, with a series of reeds or other sound-generators and an air-chamber or wind-chest, provided with a mouth-piece adapted to be blown into by the mouth and from the lungs of the performer.

It further consists in a flexible wind-chest, constructed, arranged, and adapted to be held against the perforated valve-sheet by spring-power and by the force of wind blown into it.

The object of this feature of our invention is to secure the necessary conditions consistent with a satisfactorily-working instrument.

The following specification, of which the accompanying drawings form a part, clearly sets forth the nature and manner of construction of our invention.

Figure 1 represents a section as across or through the center of the instrument. Fig. 2 is a plan view, showing our instrument with the music-sheet mounted thereon. Fig. 3 represents in section a modification of Figs. 1 and 2.

As some of the parts to be described are duplicates of each

other, we use the singular and plural number interchangeably.

L is the blow-pipe. M is the wind-chest. N is the tube-board containing the reeds. H is the valve music-paper. A series of reed-holes or tubes, S, are bored into one of the sides of the tube-board N. The reed *w*, represented as having the vibrator or tongue on its lower side, is inserted in grooves made in or about the middle of the tube S. The tube S is thus divided into two compartments. The lower compartment is closed at the mouth by the strip T. An air-passage, *u*, is made through the floor of each tube S.

The wind-chest M is constructed in two parts. A strip of rubber cloth is glued and tacked all around the inside of these parts, and thus the equivalent of a puppet-bellows is formed, having a hinge at U. A series of holes, *u'*, corresponding to the series of holes *u*, are made through the top board of the wind-chest M. The lower portion of the wind-chest M is fastened between the check-pieces R. The upper portion of the wind-chest M is left free to move between the cheek-pieces R. The tube-board N is mounted in such a manner as to admit of easy removal, so that another of different quality of tone and pitch may be put in its place. The valve music-paper H is mounted under the tube-chest N and reeds *w*, and over and upon the upper surface of the wind-chest M. The rubber-covered rollers P P' work in slots made in the cheek-pieces R. The roller P' is held down by the

Fig.1.

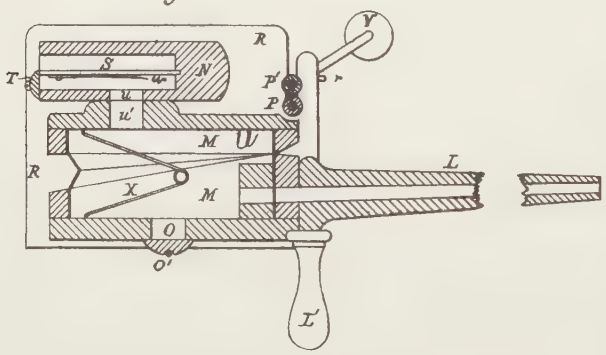

pins *r r'*. The music-paper H is inserted between the tube-board N and the upper board of the wind-chest M and between the feed-rollers P P'. The upper or free portion of the wind-chest M is pressed against the valve music-paper H by the spring X, and also by the pressure of air blown into it to operate the reeds, and thus the necessary air-tight conditions are secured. The inside of the wind-chest M and holes *u u'* and tubes S are lined with a thick coating of shellac, to prevent the moisture penetrating the wood. Any water that may collect in the wind-chest may be poured out through the hole O, covered by the slide-valve O'. The mouth-piece L is inserted in the lower portion of the wind-chest M. The handle L' is for convenience of holding by the performer.

When the handle Y is turned the valve music-paper H is drawn along and under the tube-board or reed-chest N and between the holes *u u'*, and closes and opens them according to the music to be produced. The air blown into the wind-chest passes through the perforations in the valve music-paper H, through the reeds *w*, and over the strip T to the outside air.

In all cases hitherto where a paper valve has been employed the perforations have been of varying lengths, corresponding to the lengths of the notes of the music to be produced. In our invention, for the purpose of performing slow airs, we make the perforations all of or about one uniform length. By this means we save length of paper and afford the performer facility for prolonging the notes and producing expression at will.

We do not confine ourselves to the precise details hereinbefore described. The instrument might be constructed on the plan represented in Fig. 3. The parts made of wood might

Fig.2.

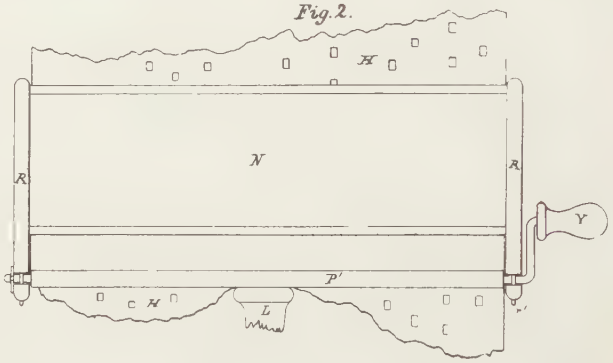

be made of metal, vulcanized rubber, or other material. A pressure-bellows might be employed, and the mouth-piece L be dispensed with. We purpose making instruments on this plan. The mechanism suggested in the modifications named is simple and well known, and without any further description could be easily constructed by any skilled mechanic.

We claim as our invention and desire to secure by Letters Patent—

1. In a musical instrument provided with a mouth-piece adapted to be blown into by the mouth and from the lungs of the performer, a sheet of paper or other flexible material, perforated at suitable intervals to produce a tune, substantially as herein described.

2. A musical instrument in which is employed a perforated valve-sheet, a flexible wind-chest constructed and arranged and otherwise adapted to be elastically held against the said valve-sheet by tension-spring and by the force of air blown into it.

3. In a reed musical instrument provided with a mouth-piece adapted to be blown into by the mouth and from the lungs of the performer, the flexible music-sheet H, provided

Fig.3.

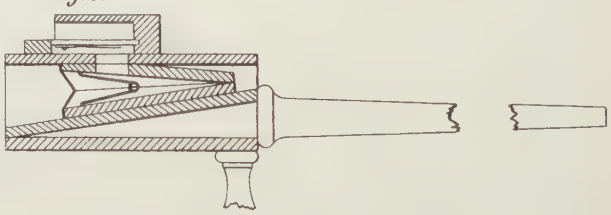

with perforations, all of or about one uniform length, substantially as and for the purpose set forth.

4. The tube-board N, wind-chest M, mouth-piece L, and feed-rollers P P', in combination with the valve music-paper H, substantially as set forth.

NEWMAN R. MARSHMAN.
MASON J. MATTHEWS.

Witnesses:
R. P. Marshman,
Moses Harris.

INTRODUCING HORTON PATENT, 1878

HE was a great writer who observed that "history is a lie agreed upon" and the proof of the charge was forthcoming when the writer was handed the translation of the French patent of Fourneaux of France, dated 1863, which had claimed to be and had been accepted as a perforated paper musical instrument, but upon his investigation, it was discovered to be nothing more or less than a common pincylinder or street organ. It is true that it showed a perforated foldable card-board and had all the ear marks of a genuine perforated paper musical instrument, and has been accepted as such by press, court, experts, and others up to the present date, and the question arises in this connection how was this deception possible and the answer is as follows:

In 1863 Fourneaux filed his application for a common pin cylinder or street organ mechanism, and subsequently received a patent thereon. In 1871 he filed an amendment to said patent, substituting the perforated folding cardboard for the pincylinder. It follows therefore that the date of his invention of the perforated card device is 1871 and not 1863 as generally supposed.

Now as the American press was discussing the McTammany player as early as 1870, a year previous, it would have been possible for Fourneaux to have gotten his idea in that way. I do not say that he obtained his knowledge of the player mechanism in that manner, and I do not believe that he ever heard of me in connection with the subject prior to 1876; but what I do say is that it was then possible that it would have been sufficient to have defeated an application under the laws of this country and ought to have defeated him in his own. It is an unheard of proceeding and if permitted under the patent laws of this country would completely demoralize and vitiate our whole patent system. Now the importance of the foregoing discovery lies in the fact that it puts the American inventors ahead of the Frenchman as the writer's established date of conception is 1866, while that of Van Dusen is 1867; and therefore robs the Frenchman of much of the glory heretofore accorded him and gives to the writer and Van Dusen the credit previously denied. Instead of the French Government allowing Fourneaux to amend and incorporate within his patent of 1863 his subsequent discoveries and improvements, he should have been compelled to take out an entirely new patent under date of 1871.

Recurring to the previous subject, namely, the McTammany player of 1876, which was the culmination and embodiment of my ten years previous experiment and discovery and which, it is admitted, comprised all the essential elements of the modern player, thousands of which were made and sold, yet the instrument was objectionable and fell far short of the ideal of its inventor; but it was as perfect and as satisfactory as the state of the arts at that time would permit and the general public were willing to buy it and pay a good price for it.

Even had we known the general principles of the modern player piano as early as 1876, it would have been an impossibility to have built one of the materials, for its constructions could not be procured, for they did not exist, and the player problem had to mark time while the collateral arts were being developed. The writer being an organist, it follows that I was familiar with the pneumatic principle as applied to organs, but at the time referred to we had no material to make primary pneumatics, had no suitable rubber tubing, no paper fit for music rolls, and I could name a hundred other things that were not only desirable but absolutely necessary. So instead of the primary pneumatic system now employed, we used a series of fingers which rested on the perforated sheet and registered with the perforations therein, and a channelled board was substituted and performed the function of the rubber or other tubing at present employed. And I might enumerate many more things needful but unobtainable at the time under consideration. And thus the pioneers in the art were handicapped, obstructed, and delayed in the development of the modern player. But while it is conceded that the McTammany player contained all the essential elements of the modern player, yet the McTammany instrument was radically different from the later day player, both in construction, design, and operation.

In fact my player of 1876 bears no resemblance whatever to the present instrument; all of which is true, and the question that arises in this connection is who is to be credited with the improvements grafted on to the McTammany player of 1876, that is for the difference between the McTammany and the present player. For instance, the McTammany player of 1876 contained a wind motor, but it was a rotary motor, and the question arises who invented the later day motor. In the McTammany player there were two ordinary foot pedals with straps extending upward over a couple of rollers and connecting with the exhauster bellows, substantially the same as in the ordinary reed organ, and the question to be answered is who invented the modern pedal mechanism. Furthermore,

while the action of the McTammany player was, broadly speaking, pneumatic, that is it was actuated by wind from the bellows, yet it did not contain a pneumatic for each note of the scale, and therefore some one must be given credit for the present improved pneumatic action; and in like manner I might mention other parts, a proposition that brings us face to face with a pretty complicated situation, and the only solution of the difficulty is to subdivide the

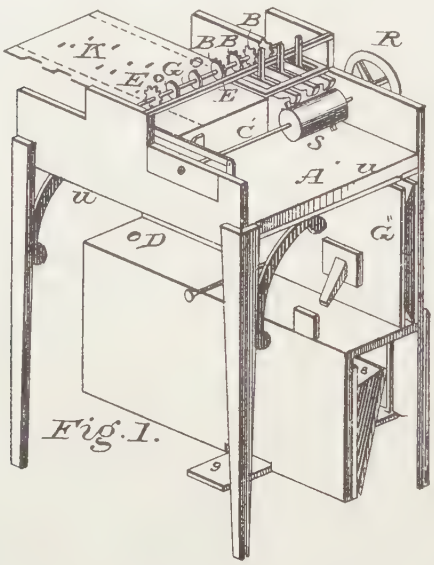

issue, dividing the problem into divisional parts or departments. For instance, we can have a chapter devoted to motors exclusively, another to pneumatic actions, one to foot pedal mechanism, and so on.

Up to the year 1876 I had the entire field to myself, but now that the player had been discussed and its future had been speculated upon by the press of the country, and a few organ experts from the east had visited St. Louis

Fig. 2.

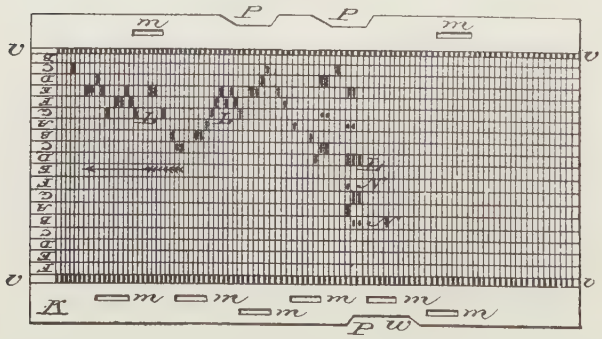

and had examined my player, including Col. Fuller of the Estey Company, and having traveled from state to state, city to city, and from one factory to another, exhibiting my models, drawings, specifications, and plans, thus disclosing to the experts and technical men in the trade, the player principles, it was not long after that when a crop of patent applications were filed in the Patent Office not only embodying the ideas of the applicants but also including every element and combination of elements embodied in my player of 1876. But in no instance did any man apply for a player patent except those who had had access to my plans.

But when I finally had raked and scraped together enough money to file a patent application on my player, which I did March 6, 1879, and interferences were declared between myself and the men who had "surreptitiously" obtained patents on my inventions, I was able in every instance to show either by correspondence or otherwise that each patent applicant preceding me had had access to my models, drawings, and plans.

Among those who helped themselves to my inventions was H. B. Horton, of Ithaca, N. Y., formerly of Akron, my former home. At the time I met him, he was a tuner and repairer for A. Straub, a reed organ manufacturer in whose factory I did part of my experimenting and where Horton got his ideas which he embodied in a patent application which was granted in 1878; and the importance of this patent lay in the claim, one which controlled the foot pedal cabinet organ manufactured by Needham, but the foot pedal mechanism broadly was declared to be my invention as the result of an interference declared later with Horton. The Horton patent is herewith shown and described.

UNITED STATES PATENT OFFICE.

Henry B. Horton, of Ithaca, New York.

IMPROVEMENT IN MECHANICAL MUSICAL INSTRUMENTS.

Specification forming part of Letters Patent No. 210,424, dated December 3, 1878; application filed March 15, 1878.

To all whom it may concern:

Be it known that I, Henry B. Horton, of Ithaca, in the county of Tompkins and State of New York, have invented certain new and useful Improvements in Wind Musical Instruments; and I do hereby declare that the following is a full, clear, and exact description thereof, which will enable others skilled in the art to which it appertains to make and use the same, reference being had to the accompanying drawings, and to the letters of reference, marked thereon, which form a part of this specification.

My invention relates to wind musical instruments; and consists in a number of new improvements for automatic musical instruments, as set forth in the following specification and accompanying drawings, in which—

Figure 1 is a perspective view of the interior or working part of an instrument which I denominate the "autophone." Fig. 2 is a plan view of a perforated strip of card-board, which I term the "valve" or "valve-sheet." Fig. 3 represents plan and end views of the exterior of the reed-plate incased in metallic tubes or pipes. Fig. 4 is a side view, and Fig. 5 is a front view, of the rotating and oscillating parts and their connections. Fig. 6 is a view representing the tremolo and its operation. Fig. 7 is a side view of the pressure or equalizing bellows, representing the springs in connection with it. Fig. 8 is a plan view of an elastic sounding-board used in the instrument.

To enable others skilled in the art to construct my instrument, I will proceed to describe the various parts, reference being made to the annexed drawings, letters, and figures.

Fig. 1 represents the valve-sheet K in the act of passing through the instrument, which can be accomplished by any unskilled person in music, and which enables him to acquire a knowledge of musical sounds. It also represents my mode of arranging the bellows 8 and receiver G"; also the position of the balance-wheel, as connected with the bellows 8 and pedal 9.

Figs. 1 and 5 represent the shaft C, on which are two spur-wheels, E E, which engage the valve-sheet K and move it

forward. I have also used two clicks or hooks in place of the spur-wheels E E, to forward the valve-sheet K, but do not consider them as good as the wheels, and three ratchet-wheels, B B B, which cause the shaft to rotate; also the plain disks O O, which press the valve-sheet K down, and hold it in close contact with the top of the reed-plate A, Fig. 3.

The valve-sheet K, Fig. 2, is made of card-board or other suitable thin material, and has on each side a row of equidistant perforations, V, to receive the teeth of the wheels E E when it is applied to the instrument, the two working after the manner of a rack and pinion.

The perforations L L L, of equal width with the mouths H of the pipes, are made at suitable intervals and in proper places longitudinally of the valve-sheet and in line with the pipes, for the purpose of allowing the air expelled by the bellows to issue from each at the proper time and cause it to produce its appropriate note. These openings may be made of various lengths to govern the duration of the note, making a semibreve, crotchet, quaver, &c., as may be required.

On one edge of the valve-sheet K are lateral indentations P P, for the purpose of admitting the tremolo to act or vibrate when desired. On the other edge of the valve-sheet is another lateral indentation, P W, for the purpose of allowing the swell, which may be made in any known form, to close when desired.

I construct the sound-apertures of different sizes for the following reasons: All key-board instruments or those having the chromatic scale, as the piano or organ, cannot be tuned with perfect harmony in all keys, the present system being to tune in equal temperament producing a sharp major

Fig 3

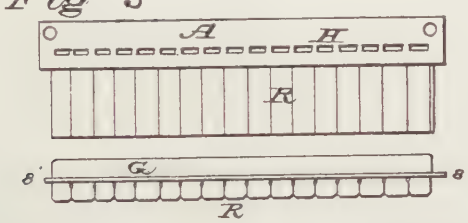

third in every key. I therefore, to remedy this defect, make the aperture N N smaller to depress the tone, making the major third perfect with the first or key note.

I construct my reeds on a continuous plate, 8′ 8′, Fig. 3, similar to harmonicas or mouth-organs; but the receiving ducts or pipes which convey the air to and from the reeds are what I consider new. The manner of forming the pipe-box is as follows: Sheets of thin metal, such as tin or some similar metal or material, of proper width, are folded or bent as shown at R, Fig. 3, to form the partitions between the reeds, as each fold or doubling of the metal is made to form the pipes side by side the length of the reed-plate 8′. The edge is soldered to the reed-plate 8′ btween the reeds on the back or outlet escape side. The reed-front or inlet side has a similar pipe-box, R, but is not rigidly fastened, in order to allow for tuning the reeds. After the escape-pipes are secured to the reed-plate 8′ the top and bottom plates, A and G, are secured in place by soldering to the reed-plate. The music-box is then ready to be hung or suspended for use by the top plate, A, leaving the reeds free to sound, as seen in end view, Fig. 4.

The advantages of constructing the pipes of metal or hard rubber instead of wood, as is usual, is, first, that a large number of reeds can be more compact and close together; second, that there is no change by moisture, expansion, or contraction, and by these improvements the valve-sheet will adhere to the apertures H, as desired.

Figs. 4 and 5 represent the rotating and oscillating parts of my instrument. Figs 1 and 4 represent a cylinder or roller having six pins or projections, which operate the valve-sheet K. This cylinder has a shaft, C′, on which is a balance-wheel, connected by a pitman to the foot-pedal 9, Fig. 1.

One of the six pins (marked 1) must be ready for action at the top when the pedal is going down, or down-beat in music.

Pins 1, 2, and 3 are triple time, as 3/4 3/8 6/8 time. Pins 1, 22, 2, 33, 3, 44 are for even time, as 2/2, 2/4, 4/4 time.

The oscillating click-bar A′ has a projection or hook downward, which connects with the roller-pin, 1 when desired. The other end has a hook or click projecting upward, con-

Fig. 4.

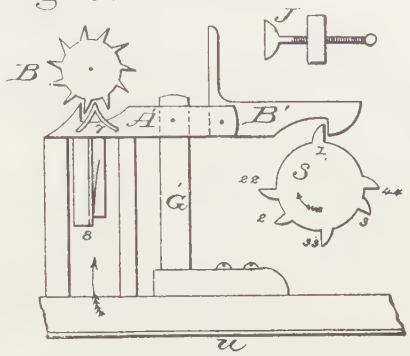

necting with the ratchet-wheels B B B, for moving the valve-sheet at intervals.

The click-bar A′ is in two parts. The part having the click downward and connecting with the rollers S is constructed in a right angle, B′, the click part forming a part of the bar, which is hinged to vibrate separately from the bar proper.

The arm of the angle B′ extends upward, and is controlled by a stop, J, which lets the click loose when desired.

The click-bar A′, in two parts, forming a whole, is held in place by an upright post, G′, pivoted at the top and bottom to allow the bar to vibrate upward when the angle-click B′ strikes the stop J. Click-bar A′ has offsets 7 7, Fig. 5, projecting toward and underneath the valve-sheet K, in such position as to enter apertures M M M, Fig. 2, for the purpose of allowing the clicks to fall into the notches of the ratchet-wheel B, Fig. 5, and by their action to forward the valve-sheet K at quickened intervals to produce short notes. The click-bar A′, No. 1, Fig. 5, has no offset or wire projection, as in all the others; but it is intended to assist

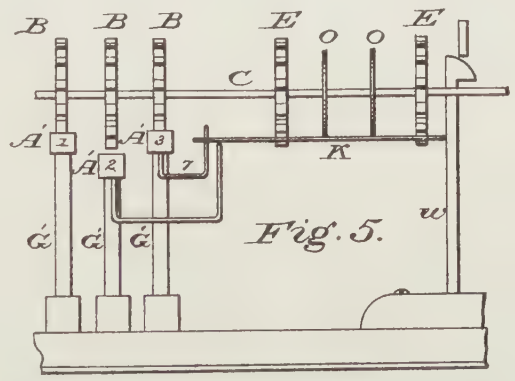

in operating the valve-sheet at every downstroke of the pedal 9, or at each revolution of the cylinder S.

I will now proceed to describe my tremolo. In Fig. 6 the balance-wheel shaft C′ has attached at one end a corrugated disk, P′. A light bar, S″, running the width of the instrument, has attached to it a series of pads, B′, which come in contact with the valve-sheet apertures. This light bar S″, is pivoted at one end, leaving it free to vibrate, the other end resting on another light bar, T, at right angles with it, which is also pivoted at one end. The ends of the

bars where they come in contact at F are loose, and the bar T rests upon the corrugated disk P′ on the balance-wheel shaft C′. The bar T comes in contact with an upright stud, W, Fig. 6, that rests against the valve-sheet K; and when the sheet is laterally cut away, as at P P, the stud W, falling into the said cuts, allows the right-angle bar T to come in contact with the corrugated disk P′, which causes the pads over the apertures of the valve-sheet to vibrate rapidly.

Fig. 7 represents my manner of softening the power or sound of the instrument. The receiver or equalizing-bellows G″ has a block, S′, resting in its center, with a rod screwed into it, said rod extending through another thick block, T′, to support it, and through the front of the case, with a knob, D, attached to it. Between the two blocks S′ and T′ are two springs, fastened, for giving force and power to the music. By drawing the knob D out, the connection of the block S′ is severed from the equalizing-bellows G″, taking the springs with it.

At the bottom or under side of the bed-plate A″, Fig. 1, which supports the reeds, being the whole size of the instrument, is an elastic sounding-board, U, Fig. 8. The reeds in this instrument being placed in a rigid air-tight chamber, they must have some flexible means to allow them to vibrate freely. To accomplish this, I provide an elastic sounding-board, Fig. 8, on the under side, or near the reeds, for the purpose above described. Said sounding-board U, Fig. 8, being thin, is ribbed each way on one side, to strengthen and improve the tone.

Having thus described my invention, what I claim, and desire to secure by Letters Patent, is—

1. The balance-wheel R, when arranged to act conjointly with foot-pedal 9, bellows 8, and pitman, in the manner and for the purpose specified.

2. The series of pins 1 2 3 in roller S, arranged to operate their corresponding clicks, as shown.

3. The apertures M M M in the valve-sheet K, when arranged to operate in combination with offsets 7 and ratchet-wheels B, in the manner shown.

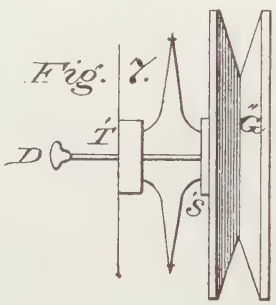

4. The lateral indentations *p p* in valve-sheet K, when arranged to act conjointly with corrugated disk P′, bars S″ and T, stud W, and pads B′, substantially in the manner and for the purpose set forth.

5. The reed-plate 8′, metal pipe-box R, and the top plate, A, having apertures H, when combined, constructed, and arranged to operate for the purpose specified.

6. The corrugated disk, P′, in combination with bars S″ and T, stud W, and pads B′, when arranged to operate as shown.

7. The valve-sheet provided with the apertures L and N,

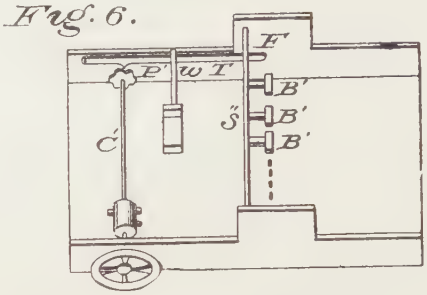

when said apertures are constructed and arranged to operate as described and shown.

8. Clicks A′ A′, with offsets 7, when arranged to operate in combination with valve-sheet K, cylinder S, with pins 1 2 3, and ratchet-wheel B, as shown and described.
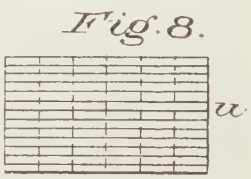
9. The click-bar A′, when made in two parts, substantially as and for the purpose specified.

10. The equalizing-bellows G″ blocks S′ and T′, with their springs and knob D, when combined and arranged to operate substantially as and for the purpose set forth.

In testimony that I claim the foregoing as my own I hereby affix my signature in presence of two witnesses.

HENRY B. HORTON.

Witnesses:
Wm. J. Totten,
Chs. G. Day.

Ending with the foregoing patent we have now reached the stage where we are compelled to subdivide the player problem and deal with one thing at a time and under a special and appropriate heading and the first and most important of such divisions would seem to the writer to be the development of the modern pneumatic action which radically differs from the action embodied in the McTammany player of 1876, which is now conceded to have been the first.

THE MODERN PNEUMATIC ACTION AND ITS DEVELOPMENT

IT is admitted that the McTammany player of 1876 contained all the essential elements of the modern player, including a pneumatic action, but that the form, shape, construction and arrangement of parts differed from the present player, and especially is this true of the action of said instrument. That while the valves of the organ were opened pneumatically or by means of wind from the bellows, the McTammany instrument of 1876 did not contain an individual pneumatic for each valve or key as at present embodied in the modern player and the question at issue is who first invented the primary and secondary pneumatic system now in vogue.

In my testimony taken before a master at Boston, February 5th, 1880, page 46 Cross. Int. 4, appears the following. Speaking of the various models and instruments made by me as early as 1870, I testified that "One consisted of a lever covered by buckskin, which was thrown off the reed by wind from the bellows." In this case I had an individual pneumatic for each reed. Furthermore, I employed a principle that was common in those days to stop the reeds from speaking, by means of a cushioned pin resting on the tongue of the reed as well as the valve, as sufficient wind could pass through the reed at times even when the valve was closed to vibrate it, particularly in the upper register of the scale.

Some organ manufacturers resorted to what was known as "bleeding" to effect the same purpose.

Now in the beforementioned model the form of pneumatic was substantially the same as shown and described in my U. S. patent No. 400,102 and I simply mention the fact to prove that I was not only familiar with the pneumatic principle as early as 1866, but that I had embodied the principle in a working model as early as 1870, as evidenced by the testimony aforesaid.

Now that the Fourneaux patent of 1863 has been shown to have been simply a pin cylinder device and not a perforated paper instrument, as previously supposed, it therefore follows that the first man in order, as the records show, is Geo. W. Van Dusen, whose date was December 10th, 1867. Consequently there can be no question about Van Dusen having shown the striking pneumatic, but without a primary. He employed a series of fingers instead, as did many subsequent inventors, including the writer, there being at that time insurmountable difficulties in the way which precluded the use of the present primary system and for a time compelled us to employ the finger system.

Van Dusen had never done more than build a small model with three keys, and this model was constructed in Needham's factory, on Twenty-third street, New York, during the latter part of the year 1866 or early in 1867. That brought our dates of conception within the same year, and in consequence it became a matter of interest to me to know Van Dusen's exact date of conception, so I accordingly paid him a visit. Then, I got into my newspaper controversy with Lowmiller about the player in 1870. I immediately communicated with parties in Nashville, Tenn., Columbus, Ohio, and Uniontown, Ohio, obtaining letters and affidavits to the effect that I had been experimenting with a perforated sheet as far back as 1865, and this correspondence I had with me as well as the newspapers, when I visited Van Dusen, and when he had examined them, he freely admitted my claim to priority and gave me a writing to that effect, and in the light of subsequent events, it was well for me that he did.

At the time to which I refer, it was presumed that Van Dusen was the first man in the world to experiment with a perforated sheet in connection with the action of a musical instrument. Thereupon my opponents concluded to get hold of the Van Dusen patent and have it reissued and its claims made broad enough to cover the line of instruments that I was at that time manufacturing, and thus drive me out of business, so negotiations were opened with him and his patent bought and put into the hands of as able a firm of patent solicitors as could be found in New York City. They lost no time in filing an application for the reissue of the Van Dusen patent, and all that intervened between them and success was the admission of Van Dusen in writing that I antedated him in the conception of the perforated sheet and a decision of the U. S. Supreme Court in the case of Miller vs. Bridgeport Brass Co., 104 U. S. 350-356, which appeared in the MUSICAL COURIER EXTRA, November 22 issue, and practically put an end to the reissue of patents for the purpose of anticipating later inventions, which practice had led to the abuse of the reissue law. Having failed in their purpose to get a broadened reissue patent and such patents being discredited and Van Dusen having refused to go on the stand and testify against me, they fell back upon Newman R. Marshman, who had also experimented with a perforated music sheet at the Needham factory, and got him to come forward with a claim to prior inventorship of the perforated sheet, so that interference was declared between Marshman and the writer, which was duly tried and de-

clared in my favor. The same was true of Needham, Horton and Matthews, I having been declared in interference with all of them and the decision of the Commissioner of Patents in each instance being in my favor.

Now, it will be observed that up to this time the issue had been who, in America, had been the first to combine with the action of a musical instrument, a perforated sheet to govern the operations thereof, and the conclusion reached at that time was that the honor belonged to the writer, and that impression prevailed until my application for a patent covering the whole system had been filed in

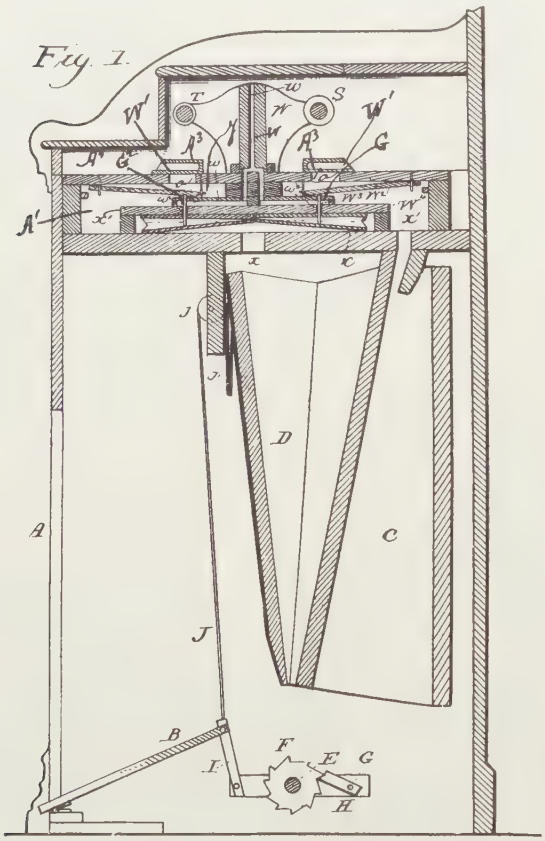

McTAMMANY PATENT, OCTOBER 2, 1888.

the patent office. Thereupon my opponents, seeing defeat staring them in the face, made haste to search the records both here and abroad, with the result that the patents of Morse, Seytre, Bain, Pape and Hunt & Bradish were discovered. Notwithstanding a careful examination of the foregoing patents, however, nothing was disclosed bearing upon the pneumatic system except the patent of Fourneaux of 1871, previously referred to and which showed a striking pneumatic in combination with the keyboard of a musical instrument. It follows, logically, that Fourneaux was the second man to deal with the problem, and the next was William H. Schmoele and Henry Schmoele, Jr., whose patent is dated December 16th, 1873, and although the drawing is meagre and very unsatisfactory, yet it discloses a new principle, namely, the combination of electricity and air for the government of the action of a musical instrument, and it also illustrates a primary and striking pneumatic, the former controlled by electricity, the latter by air, and in several minor respects this action anticipated the present modern player system, and had these brothers persevered they would have been an important factor in the history, as they possessed many of the attributes that count for success in the development of a new industry.

Nothing more bearing upon the subject appeared until several years later and my experiments and those of Van Dusen, Fourneaux and Schmoele only served as pointers to indicate in a general way the trend of the times, which was toward the present primary pneumatic system, but the thing that stood in the way was our inability to find a material suitable for the construction of the primary pneumatics, so in the absence of such a material we had resort to the finger system, which consisted of a series of fingers which rested on the sheet and registered with the perfora-

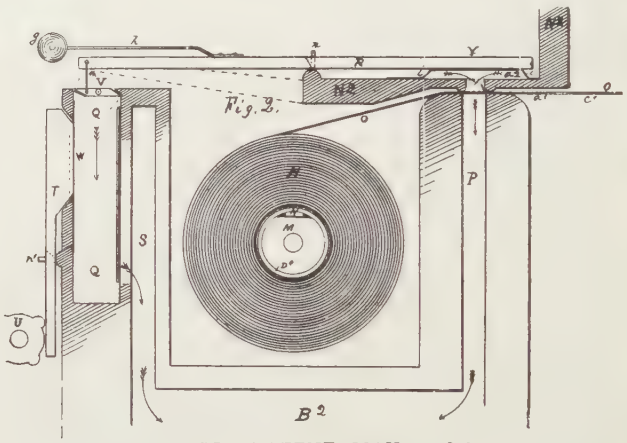

M. GALLY PATENT, MAY 7, 1878.

tion therein as illustrated by my caveat filed September, 1876, also my patent No. 290,697, application filed March 6th, 1879; Van Dusen, 1867; Fourneaux, 1871; Azro Fowler, August 31, 1880, and I might mention others.

But while the writer and others were manufacturing and marketing those finger instruments and thousands had been made and sold, yet neither the writer nor anyone else felt satisfied with the system and each and all were engaged in the attempt to dispense with the fingers, and while it was a comparatively easy matter to broadly establish my title to the player mechanism, including the pneumatic action of 1876 when I was alone in the art, yet when it comes to determining who worked out subsequent improvements and minor details and especially where fully twenty different inventors were engaged on the same problem, the determination of the issue is not so easy, and while I made bold to declare my prior inventorship of the player mechanism broadly, including the pneumatic action, yet when it comes to the question of deciding between myself and twenty others, regarding who was first to work out this or that detail or subsequent improvements, I confess to a feeling of hesitancy in arriving at a decision. But I had begun to study the problem as far back as 1865 and I had actually begun manufacturing players as early as the spring

of 1876 and had kept it up steadily until the Munroe Company sold out in 1889. It follows therefore that I had an insight into the subject and an experience and advantage over others who came into the player circle at a later date.

In fact, my first competition in the business was from E. P. Needham, who entered the lists in 1877, one year after the writer—the next was the Mechanical Orguinette Company, now known as the Aeolian Company, who entered the field in 1878, or two years later. But neither Needham or the Mechanical Orguinette Company had any faith in any perforated paper musical instrument embodying an intervening mechanism between the paper and the valve, but confined themselves to the manufacturing of the paper as a valve system, leaving it to the writer and others to further improve the intervening system.

It had at first been regarded as impossible to get satisfactory results out of a pneumatic action without a primary system, yet in our desperation we were driven to make the attempt, and as a result we have the McTammany plan, as illustrated in my patent (No. 390,385) and the Gally plan, as indicated by his patent (No. 203,257). And by the way of indicating the feeling and attitude of the "doubting Thomases" on the subject, I herewith quote Gally's appeal to them:

"It would, perhaps, appear, on a cursory examination, that after the depression of the key, the atmospheric pressure on follower Y. would hold the base of the chamber down upon its seat, not allowing ingress of air for returning the key to place; but this is not practically the fact."

But the trade regarded Gally's claims with suspicion, and while nothing came of it, yet it served to arouse hope that after all it might be possible to operate a striking pneumatic without the aid of a primary system. Then came the McTammany system, which sustained the Gally contention, and although it was not in a form that would today pass muster as a pneumatic, yet it was acceptable at that time, 1880, and quantities were made and sold. McTammany was followed by another attempt of Gally, dated November 26, 1878, and numbered 210,249, which further illustrates the non-primary pneumatic system, but the action as a manufacturing proposition was a failure except that it eventually led up to a practicable result and enabled Gally to get a footing in the trade, as evidenced by his patent, number 351,173, October 19, 1886.

DEVELOPMENT OF THE INDIVIDUAL PNEUMATIC ACTION

GALLY'S patent of May 7, 1878, and also that of November 26, 1878, were never regarded otherwise than as freaks. They contained no claims or even suggestions of value, and are only incorporated herein as indicating the direction in which the art was tending at the time, which was toward a pneumatic for each sounding device as indicated by Schmoele and Van Dusen. Gally's next patent is dated April 8, 1879, and in this patent for the first time, Gally's idea of a pneumatic action begins to

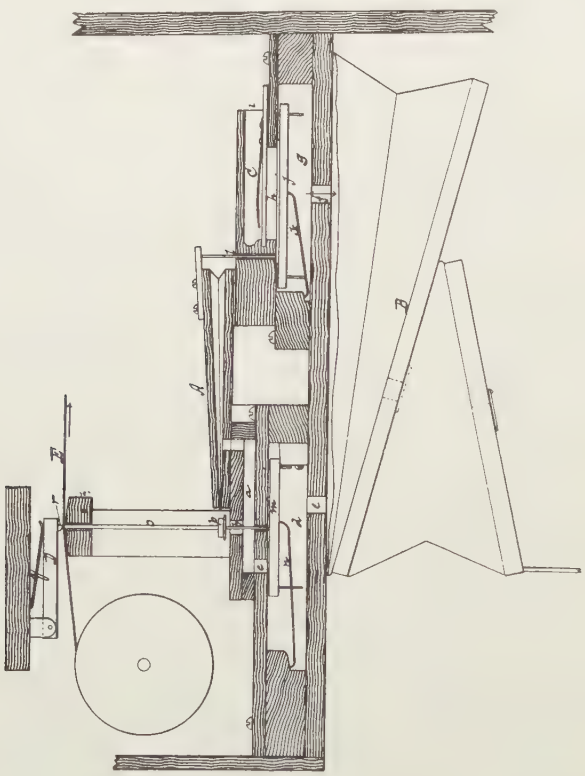

A. FOWLER PATENT, No. 231,786, AUGUST 31, 1880.

assume practical form and in some respects resembles the form and shape of our modern pneumatic system; and had he persevered in this same direction, I have no doubt but that he would have surpassed all his competitors in the development of the individual pneumatic system, for in this patent he shows both a primary and striking or secondary pneumatic; but unfortunately about that time Gally had his attention drawn to another system, and the plan above referred to, which is shown and described in his patent of 1879 was abandoned, not one instrument of that kind ever having been made or sold.

Gally's next patent is dated November 8, 1881, and although this instrument was actually made and as far as its musical results were concerned, it was really a wonder for those days. In this instrument there was a system of primary pneumatics but the striking pneumatics, shown and described in his prior patent were omitted and the cylinder "C" and the shoe mechanism "D" were substituted instead to actuate the keys. About the time Gally was developing the instrument described, Roswell T. Smith of Nashua, N. H., was simultaneously planning an instrument along the same lines; subsequently J. A. Smith, now of Hanover, Pa., and G. Howlett Davis put instruments upon the market, embodying substantially the same principles; and for a time considerable business was done in instruments of this character.

At the time that Gally and the writer were striving with might and main to accomplish the object in view, namely, dispense with the fingers and permit the air to pass directly through the sheet and into the apertures of the tracker bar, E. P. Needham, Azro Fowler and O. H. Needham were bent upon the same purpose, as evidenced by patents to E. P. Needham March 18, 1879, E. P. and O. H. Needham February 17, 1880, Needham and Fowler, February 22, 1881; and in order that the reader may the more readily understand the difficulty to be dealt with, I herewith include patent to Needham and Fowler, dated August 31, 1880, and to the objectionable mechanism, namely parts "D," "E", "v" and "p" which it was desirable to eliminate (see patent to Fowler, 231,786); in other words, to dispense with all mechanism located above or resting upon the sheet, or that which interfered in any way with the removal or insertion of the music roll.

In this connection I herewith print and direct attention to the McTammany patent No. 400,102, in which the absence of the fingers is shown and all other mechanism removed from above the music sheet, and while the application is dated October 23, 1885, yet the instruments were manufactured and sold by us as early as 1880; as witness, the following from the sworn testimony of the writer and affidavits of J. H. Salmon and George Currier of Cambridge, Mass.

McTammany's sworn testimony:

"No sooner than I had finished my last instrument at St. Louis in 1876 than I began to devise some means to

dispense with the fingers. So, early in the year 1877, I conducted a number of experiments at Cambridge, Mass., with that object in view. Which experiments resulted in the plan set forth in my patent No. 400,102, which may be regarded as the first practical primary system and the ori-

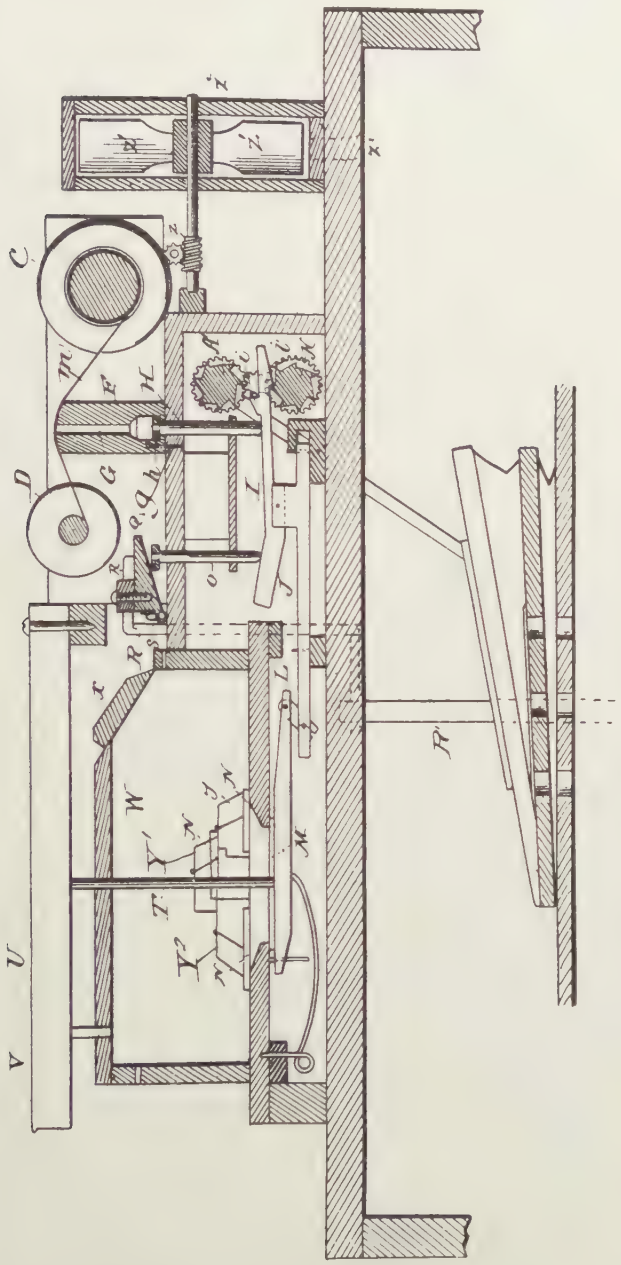

McTAMMANY PATENT, MARCH 26, 1889, No. 400,102.

gin and fore-runner of the present plan, though differing radically in construction and the application of the air."

In support of the foregoing, I herewith submit the affidavits of J. H. Salmon and George Currier:

To the Honorable Commissioner of Patents, Washington, D. C., or those whom it may concern:

My name is James H. Salmon. I am a resident of Cambridge, Mass.; am sixty years of age; and am employed by the Briggs Piano Company of Boston, Mass., as superintendent. I have known John McTammany since 1877 and am quite familiar with his experiments in connection with mechanically operated musical instruments.

At the request of Mr. McTammany I have examined the drawings and specifications now on file at the Patent Office, Washington, D. C., in connection with Patent No. 400,102. I recognize it, the model or part of it having been made by me under the direction of Mr. McTammany, while in his employ. Part of said model I believe to have been made either by the Kelly or Severns Piano Action Company of Cambridge, Mass. This work was done some time in the spring of 1879. There had been considerable wear of the finger points, by reason of the papers' action thereon, and the question had been discussed between Mr. McTammany and myself as to how the Instrument could be improved so as to obviate this difficulty, and this improvement was made for

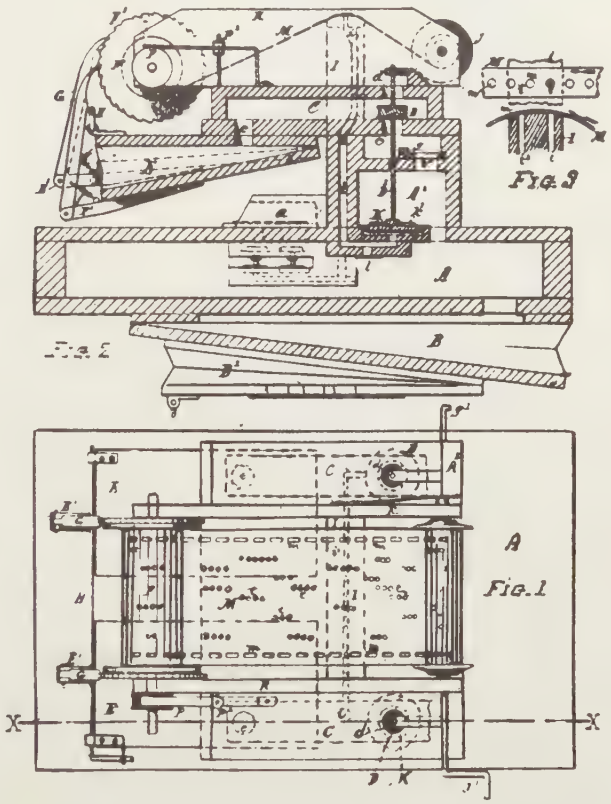

McTAMMANY PATENT, No. 390,386, OCTOBER 2, 1888.

that purpose. The object of the invention is self-evident; namely, to substitute the pneumatic plunger "H" for the fingers of Van Dusen, Fowler, and others.

(Signed) JAMES H. SALMON.

Middlesex ss.

Cambridge, Mass., July 27, 1910.

On this 27th day of July, A. D., 1910, before me personally appeared James H. Salmon, to be known and known to me to be the person who signed the foregoing affidavit, and made oath that the statements by him subscribed are true.

Before me

JOHN LATHROP DYER,
Justice of the Peace.

Middlesex ss

Cambridge, Mass., July 28, 1910.

Before me personally appeared George Courier, of Cambridge, County of Middlesex and Commonwealth of Massachusetts, and being duly sworn by me, made oath that he had examined the statements above subscribed by James H.

Salmon, that he knows of the contents thereof, and to his own knowledge the statements of the fact therein contained are true.

Before me
JOHN LATHROP DYER,
Justice of the Peace.

Having finished my invention shown and described in my patent 400,102, and placed it upon the market, my next step was to develop and supply the trade with the instrument shown and described in my patent 390,386. (See Figure 1.) But this instrument, while containing no pri-

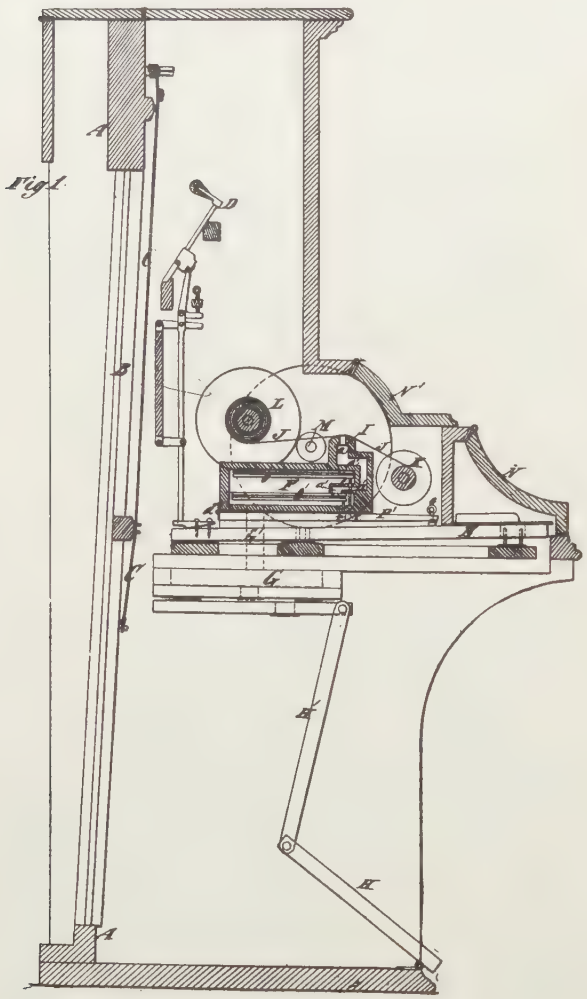

E. P. NEEDHAM & A. FOWLER PATENT, No. 238,145, FEBRUARY 22, 1881.

mary system, had nevertheless done away with the objectionable fingers and the next move upon my part was the introduction of the system shown and described by me in my patent No. 390.386, which to all intents and purposes was the present pneumatic system, the method in vogue today.

But I was not the only one who was working along these lines, for as a matter of fact Gally; E. P., O. H. and C. A. Needham; Fowler; Schmoele; Van Dusen; and other minds were also concentrated upon the subject, each striving to see who could reach the goal first. Furthermore, we were conversant with each other's efforts and keeping tab upon each other's progress; and this race began with me as early as 1877. The trade had seen my player in 1876 as I went the rounds of the factories of the country, and they were quick to size it up and point out its shortcomings and to take measures to overcome them. The principal objection to my player of 1876 was the finger mechanism which rested on the sheet, and the absence of the individual pneumatic, and it was for the object of overcoming these objections that the inventions of Gally, Needham, Fowler, and others referred to, were developed and patented.

I was in New York City in 1880 and told Needham that I had developed and introduced the pneumatic system into the Taylor & Farley and Taber organs and that they were meeting with a ready sale. I also told him that I had introduced the player mechanism into the piano, and offered to take out a patent if he would manufacture them and guarantee me a royalty thereon. He informed me that he was applying the pneumatic system to the piano himself, and therefore declined my proposition. Just then a young man put in an appearance and I recognized him; upon inquiry I was informed that his name was C. A.

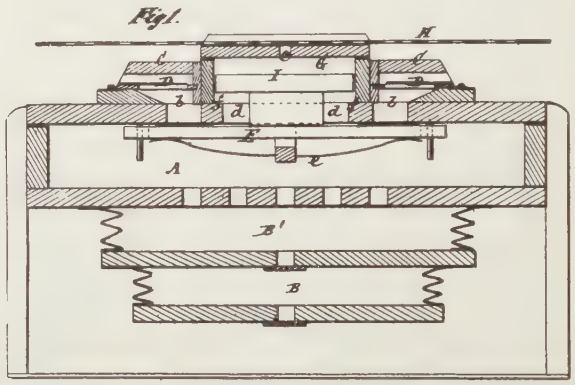

O. H. NEEDHAM PATENT, No. 213,442, MARCH 18, 1879.

Needham, a son of E. P. Needham. That young man had been visiting my factory at stated intervals for years without disclosing his identity; I so stated to E. P. Needham and subsequently established the fact in court. In view of the foregoing fact, I withdrew from the Needham presence without having succeeded in my plans, which were and had been from my visit to his factory in 1876, to form a partnership, or have him manufacture the instruments and pay me a royalty, which would have been a good move on the part of both of us. Needham and Fowler filed an application for an inside or interior player on July 3, 1880, and a patent was issued to them February 22, 1881, as evidenced by patent No. 238,145. I filed no application neither on the piano nor the application of the system to the Taylor & Farley and Taber organs. I had become thoroughly disgusted with the defects and shortcomings of our patent procedure, had spent so much time and money that, like the either and neither millstones, the law and the lawyers' delays were not only breaking me to pieces, but actually grinding me into powder; so I declined to continue the game for the sole benefit of the legal fraternity, and kept away from the Patent Office altogether.

So it came to pass that the player mechanism was introduced into the piano in the year 1880. Whether Needham and Fowler or the writer was first to do it never was determined for the reason that I declined to make application and have the issue settled by inaugurating another expensive patent interference with all that the statement implied, but while broadly speaking the pneumatic mechanism had been introduced into the piano, yet the end was not yet, and considerable improvement had to be made before the feat met with the unqualified approval of the manufacturers and musicians, but there was a healthy, steady growth all along the line, and instead of but three patents being issued as in 1877 as many as twenty were issued in 1879.

I have directed special attention to patents of Mr. Gally Nos. 351,171 and 351,173 especially for the reason that while he had taken out other patents on or about the same date yet the aforementioned relate more particularly to the pneumatic action, the subject under consideration.

Up to the year 1876, I alone was engaged in the development of the player, so when I summed up the number of elements embodied in my player of 1876, I found that they numbered fourteen, and when I laid claim to the player broadly at that time, there were none to dispute my claim. My player of 1876 was susceptible of improvement, and nobody knew it better than I, and a year or two after my player had been on exhibition, other mechanics and inventors came forward with suggestions for its betterment, meanwhile applying for patents on their improvements, as the records at the Patent Office abundantly show, but I had had enough of the United States Patent Office and kept away from it as much as possible, putting my improvements on the shelf, for as long as I kept spending my time and money applying for patents, just so long interferences were being declared between me and others, and the costs of such litigation kept me constantly impoverished and hindered my progress, so instead of the records of the Patent Office indicating the real state of the art, they did just the opposite and were calculated to mislead anyone unfamiliar with the actual progress of the player development.

For instance, patents were issued to Needham, Horton, Marshman and Mathews, covering important elements and combinations of elements embodied in the player; then I entered the Patent Office and challenged their right to hold such patents, whereupon the several cases were tried. I was declared to be the inventor of the things in dispute and it was further stated that the parties referred to obtained their patents "surreptitiously." I was given a patent covering the claims I won, and from that time on the Patent Office "blacked out" the claims in the patents of my competitors so that the general public would be apprised of the actual condition of affairs in the Patent Office. But the government has ceased "blacking out" claims in "surreptitious patents" and thus the public and inventors are misled regarding the actual condition of affairs. Hence much of the controversy regarding the inventorship of the player, so while there can be no controversy regarding my inventorship of my player of 1876, and the essential elements it contains, nevertheless, there is some question regarding the part I have played in its subsequent development and where several inventors have been working along the same line and with the same object in view, it is not an easy matter to determine who, out of twenty men, more or less, was the first to do a certain thing or who made this or that improvement or alteration on the McTammany player of 1876. And yet, upon the settlement of that question the issue between two inventors may hinge and sometimes the question may involve hundreds of millions of dollars, as in the case of Bell vs. Gray, where it was claimed that Prof. Gray, and not Prof. Bell, was first to enter the U. S. Patent Office and that meant first blood for Bell.

The principle involved in the question of priority never was more clearly defined nor more graphically illustrated than by the immortal Webster, in one of the most celebrated cases that ever came before the United States

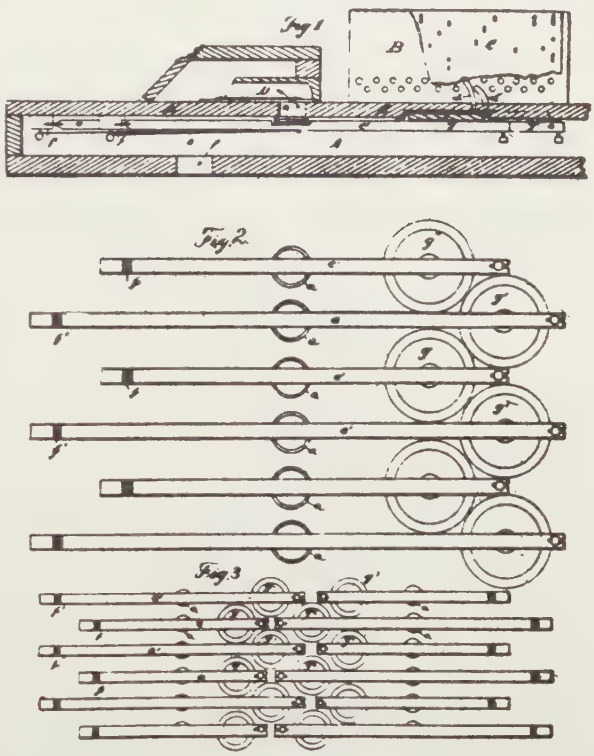

GALLY PATENT, No. 351,173, OCTOBER 19, 1886.

Supreme Court. Webster likened the several inventor claimants to a flock of pigeons circling around a lofty steeple, each seeking some suitable place to alight. At last one of the flock saw a ledge or shelf and immediately alighted thereon; thereupon all the others followed suit. In like manner Needham, Gally, Fowler and others were experimenting with a view to improving the McTammany mechanism. McTammany was engrossed upon the same subject.

It is conceded that, broadly speaking, the action of the McTammany player was pneumatic, but it did not contain an individual pneumatic for each key or reed, and it was to overcome this objection that they were devoting their energies and attention and it is hardly conceivable that all of them could have discovered a remedy at the same moment or that they solved the problem in the same manner, for the patent drawings themselves disclose a

radical difference in their respective mechanisms, although the musical results may have been substantially the same in each case. However, the object was accomplished and an individual pneumatic system evolved and the question is, which of all these inventors was the first to make the instrument in compliance with the provisions of law, or, in the language of Daniel Webster, which pigeon was the first to alight. Neither Needham, Gally, Fowler nor any other of the pioneers have come forward to question my prior inventorship of the modern pneumatic action, but the men who have come forth to dispute my claims are men who did not enter the player field until 1897, and it is a matter of common knowledge that the McTammany Company was turning out full-fledged players, including

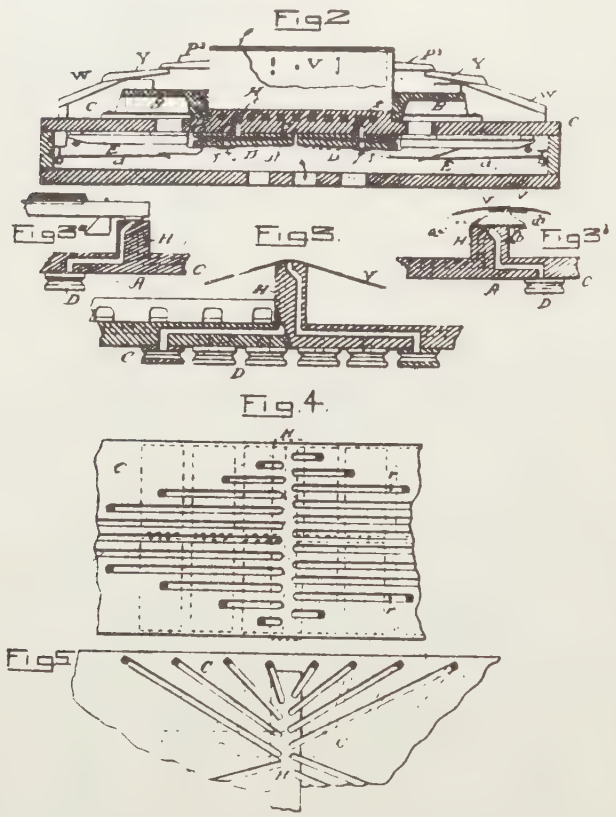

GALLY PATENT, No. 351,171, OCTOBER 19, 1886.

the primary and secondary systems, as early as 1880, seventeen years before my critics had entered the game, while my patents embodying the things in dispute had been issued to me years before.

It will doubtless surprise the average player manufacturer of the present day to know that the first pneumatic players had no primary pneumatics whatever; that the air went direct through the tracker bar into the striking pneumatic, and it will further surprise the latter-day player manufacturers to know that said instruments worked well and gave good satisfaction at the time to which I refer, and of all the primaryless pneumatic actions invented or manufactured in those days, the one patented by Merrit Gally on October 19, 1886, was easily the best and for rapidity of execution and in several other respects, it would compare favorably with the players of the present day, but while the Gally instrument referred to was regarded as a success at the time, yet it had its objections and limitations. The striking pneumatics had to be nicely poised, its parts accurately and peculiarly adjusted and regulated to perfection, as indicated by the language of the specification which reads as follows:

In order that the pneumatic motors *g g'*, Fig. 2, might be large enough to be of sufficient power to operate the valves *a* when arranged in approximately close order, it has been my custom to place the motors in alternate arrangement on both sides of the line of valves and alternate the arrangement of the valve-actuating levers. This construction necessitated the extension of the pneumatic operating-tubes *d* between the valves *a*, to reach the motors placed on one side of the valve-line. To obviate this necessity and to secure a more direct connection of pneumatic tubes and motors I arrange the alternating pneumatic motors *g g'* at one side of the series of valves *a*, and hinge all the valve-actuating levers at the opposite side of the series of valves, as shown in Figs. 1 and 2. This brings the pneumatic motors in direct and easy connection with the tubes of a tracker-range for mechanically operating the motors, as shown, or with any key-operating mechanism, as the case may require.

Furthermore, the Gally system was limited to the operation of a single set of reeds and we were not in search of limitations. The McTammany player of 1876 had limitations, and to spare, and what we were trying to do was to overcome them. We did not propose to confine ourselves to one or any number of sets of reeds, so while the Gally action (No. 351,173, Oct. 19, 1886) was a step in the right direction and enabled the trade to tide over a difficult situation, yet it was not, and could not, in the nature of things, be regarded as a finality, so the struggle for perfection went on. Meanwhile the McTammany Company introduced within the Taylor & Farley and Taber Organs and also in the Hallet & Cumston Square piano, a pneumatic action, in 1880, that was to all intents and purposes the forerunner of our modern action, containing as it did, a primary and striking pneumatic, as shown by my patent 390,386, the model and drawings of which were the work of Wm. D. Parker, said drawing, signed and dated by that gentleman, being in my possession at this writing, also seven affidavits of competent witnesses who either were engaged in the work or cognizant of the activities of the McTammany Company at the time under consideration. So that I hold that the birth of the modern pneumatic player action dates from 1880 and that it was the invention of the writer. However, that is a question which the reader as well as the writer can settle for himself, as he has all the facts and patents placed before him that in any way bear upon the subject.

351,171. MECHANICAL MUSICAL INSTRUMENT. Merritt Gally, New York, N. Y. Filed December 23, 1884. Serial No. 151,047. (No model.)

To all whom it may concern:

Be it known that I, Merritt Gally, residing at New York, in the county of New York, and State of New York, have invented certain new and useful Improvements in Mechanical Musical Instruments, of which the following is a specification, reference being had therein to the accompanying drawings.

In the accompanying drawings, Figure 1 is a side view of an instrument embodying the features of my invention. Fig. 1a is a transverse section showing the construction of the swell motor. Fig. 2 is a transverse section of the exhaust-air chest, showing the bellows, pneumatics, and reed valves, also the tracker-range, inclosed grooves, reeds, etc. Fig. 3

is a transverse section of a tracker-range, showing its ducts leading into inclosed grooves, which terminate in pneumatic motors. Fig. 3a is a modification showing tracker-range ducts operated by finger-keys. Fig. 3b is a modification showing tracker-ducts operated by means of music-sheet and valves connected directly therewith. Fig. 4 is a plan of the grooved board with parallel grooves; Fig. 5, a modification of grooved board having diverging grooves. Fig. 6 is a perspective of combined tracker and grooved board, both having diverging grooves; and Fig. 7 is a modification of the construction of Fig. 2.

In a small organ it has been found very difficult to construct and arrange the exhaust-pumps of the bellows in a manner to produce sufficient exhaust for the perfect operation of the instrument. It is also necessary, when pumps are operated by crank, as shown in drawings, Fig. 1, to have at least three pumps, in order to secure a steady motion to the crank. Three pumps, placed on the surface of reservoir F, would be so narrow that their folds would injure their capacity for properly exhausting the instrument. To obviate this defect, I use only two pumps, GK, on the face of the reservoir F, and place a third pump, L, at the end of the reservoir, as shown. The dotted lines show the position of the leader from reservoir F to pump L. Pump L is shown attached for support to the end of wind-chest A; but it may be attached, if preferable, directly to the end of reservoir F. Motion is given to pumps G and K by means of pitmen N and M, operated by cranks P of crankshaft *e*. I make a slot in pitman N, or in a piece attached thereto. A pin, *d*, projecting from the side of pump L, enters the slot of pitman N. The moving pitman, in connection with the pin, produces the movement of the pump L, the three pumps operating in proper time to secure a steady motion to the crankshaft, and also producing a proper amount of exhaust.

The valves E for the sounding devices, as shown in Fig. 2, are placed within the exhaust-chest A, and are held to their seats by means of springs *a*. These valves are operated by means of bellows-shaped pneumatics D. Two reed-boards, B B, each contain a part of the scale represented by the range of the tracker H. In an ordinary manual reed organ, the reeds are placed as near together as possible, in order to correspond in position with the finger keyboard. Pneumatic motors made narrow enough to correspond with such an arrangement of reeds would be weak in their action and would not open the reed-valves unless very nicely and carefully adjusted. To avoid the necessity of such careful adjustment I make the pneumatic motors wider and space the reeds to correspond, as shown in Fig. 3. With only one reed-board for the entire scale, the instrument, with these spaced reeds, would be much too long. I therefore divide the scale and use two reed-boards, B, placed opposite each other, as shown in Figs. 2 and 7, and place the pneumatic motors in two lines between them, one line of motors for each reed-board.

In Fig. 2 the pneumatic motors D are shown attached directly to the plane face of the valve-board; but in Fig. 7 a recess is shown in the valve-board in which the two lines of pneumatics are placed, allowing the valves to project directly under them.

In my application for patent filed October 30, 1882, I describe inclosed grooves leading from pneumatic motors toward the tracker-range or operating keys. In Figs. 2 and 3 of the present case I show a similar construction of grooves having tracker-range H attached to the grooved board, the ducts of the tracker leading directly into the grooves. Fig. 4 shows a plan of the grooves arranged parallel to each other, the position of the pneumatics being shown by dotted lines. Fig. 5 is a modification, showing divergent grooves. Fig. 6 is a perspective showing the tracker-range H, having diverging ducts leading into diverging grooves in groove-board C. I use this construction when the scale of the instrument is very long. To attempt to reach directly the pneumatics of a long scale by means of diverging ducts in the tracker-range would require a tracker-range too high to be conveniently placed in an ordinary instrument, and to depend alone on diverging inclosed grooves in the grooved board with parallel ducts in the tracker-range would make the grooved board for a long scale too wide for an ordinary instrument. I therefore use, when desirable, the modification shown in Fig. 6, combining the tracker-range having diverging ducts with the grooved board having diverging grooves. The ducts of the tracker-range may pass into the diverging grooves of the board only on one side of the tracker-range, or may alternate, passing into grooves on both sides of the tracker-range, as indicated by the dotted lines.

In using the tracker-range and grooved board combined I employ either the parallel or the diverging grooves or ducts, as the case may require.

To operate the pneumatic motors I use either the perforated music-sheet V, Fig. 2, directly in connection with the tracker-range or the music sheet in connection with valves on the face of the tracker-range, as shown in modification, Fig. 3*b*, or operate them by means of finger-keys, as shown in modification, Fig. 3*a*. In using the valves V′ on the face of the tracker-range, I hinge them on one side, as shown. The valve is held open by means of a spring, a^2, unless held closed by means of the pressure of the music-sheet V. When a perforation in the music-sheet passes over the spur of valve V′ the spur passes into the perforation and the valve opens.

The letter d^2 indicates the music-sheet rest.

In Fig. 1 is shown the large pneumatic motor X, which operates the swell or swells of the instrument. This motor is operated indirectly from the tracker-range through a small sensitive pneumatic, Y. The construction is more particularly shown in Fig. 1*a*. As I describe and claim, broadly, in

Fig. 6.

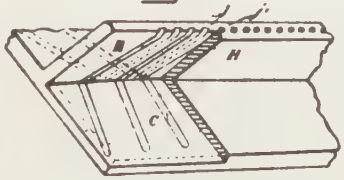

Fig. 7.

GALLY PATENT, No. 351,171, OCTOBER 19, 1886.

previous patents this method of operating the swells, I will only describe specifically the present construction and arrangement. The large pneumatic X is placed on the valve-board C outside of the air-chest A, and the small operating pneumatic Y is placed within the chest, as shown. The duct *e* leads to the tracker-range and the small duct *p* to the interior of the air chest A. This duct *p* may lead through the movable board of the pneumatic, if desired. The operation will be the same. When the pneumatic Y opens valve *n*, the large motor-pneumatic X is exhausted and opens the swell W.

In my patents of April 8, 1879, I produce the return movement of the motor-pneumatic X by means of the return movement of the primary pneumatic Y, and in my patent of November 25, 1879, I produce the return movement of the motor-pneumatic X by means of a duct from the tracker-range directly to the motor-pneumatic. In the present case, I either connect the motor-pneumatic by a duct to the

tracker-range for the return movement, or use the more-quickly-acting device shown in Fig. 1*a*. The small primary pneumatic *h* connects with the tracker-range through duct *m*. This primary pneumatic operates the valve n^2, which opens a duct from the interior of the motor X to the external atmosphere. Thus the motor may remain collapsed after the return movement of pneumatic Y until it is desirable to inflate it, when it may be quickly or slowly done by means of the primary pneumatic *h*.

The operation of the pneumatic motors D, Figs. 2 and 7, depends upon the difference in air-pressure on the two sides of the follower or movable board of the pneumatic, caused by the opening of duct *t'* to the external atmosphere, duct *f* being much smaller than duct *t*, in order that the air passing through the music-sheet may be in excess of that passing through duct *f*. This is broadly covered by claim 3 of my patent April 8, 1879. The position of duct *f* is immaterial, whether as shown in Fig. 2 or as *p*, Fig. 1*a*, the effect is the same. I sometimes lead the duct *p* directly into the duct *t*, near the pneumatic, as shown at *r*, Fig. 4.

The principal feature of the pneumatic action in the present case is its arrangement and combination with other parts to product a compact instrument of cheap and durable construction.

THE DOUBLE PRIMARY

AS stated in previous chapters, while the action of the McTammany players of 1876 was pneumatic and broadly covered the principle of actuating the action by wind from the bellows, for which I was entitled to receive a claim broad enough to cover the pneumatic principle as applied to inside players, yet I have tried to make it plain to my readers that the industry was established upon the wide sheet and the paper acting directly as a valve to the reeds, thus doing away with all intervening mechanism and bringing the proposition down to its most complete form. But the wide sheet was very objectionable, as it would absorb moisture and would swell to such an extent that the perforations of the sheet would not register with or coincide with the reed cells of the tracker, and so for a time the paper-as-a-valve type of instrument dominated the market and the opponents of the McTammany system were for the time being able to suppress the McTammany plan. But the trade was beginning to wake up to the possibilities of an instrument operable by means of a perforated music sheet, and the more they began to recognize the advantages of the McTammany system with its narrow sheet on rolls, foot pedals instead of crank for feeding the sheet, wind or spring motor and pneumatic action, etc., the more they clamored for improvement.

For be it understood, progress does not always come from and by the manufacturers; on the contrary, the manufacturers have more than once become compelled, in spite of themselves, to "get a move one"; for it is not only the dealers but the public who say that the system was crude and undeveloped and that there were greater possibilities in the background. The people made their demands known to the dealers and the dealers passed the proposition up to the manufacturer. Thus the manufacturer found himself between the devil and the deep sea; in short, it was one of those instance of "Vox Populi Vox Dei."

In vain the manufacturers tried to stem the flood; the tide of public opinion kept rising and rising until it finally rose so high that even the Steinways had to haul down the flag of their opposition and recognize the fundamental right of the public to have what it wants, if it had the money to pay for it. And it was the denial of that right that compelled the Steinway agents throughout the land to rebel against the attitude and policy of that company, and demand that some plan or provision for supplying their agents with the Steinway pianos with the player mechanism be adopted; hence the Steinway-Aeolian deal.

Manufacturers Delay Progress?

In fact, so bitterly did some of the manufacturers oppose the dealers that in many instances the dealers put the player mechanism in the pianos themselves, and on a recent trip to Baltimore I called upon the Caulfield Company, who showed me two grands of different manufacture into which they had introduced the player mechanism, and that successfully. When I asked Mr. Caulfield why he had gone to so much trouble and expense when the manufacturers could have done the work at less cost, he replied: "Yes, I know it, but they wouldn't and didn't, so, having advertised those makes of pianos, I either had to give up the agency or insert the player mechanism, and I chose the latter course."

It might with perfect justice be said that the industry would have been ten years ahead of what it is at present if it had not been for the blind unreasoning attitude of the manufacturers. So the player had to make haste slowly for the reasons set forth, and it will go slowly more or less for all time to come, for the self-same reason. And the future historian will ask himself, why, if the McTammany system had been developed with narrow sheet on rolls, wind and spring motor, and foot pedal mechanism, etc., as early as 1876, why didn't the manufacturers avail themselves of it and introduce the system into their instruments. And the answer is "Prejudice"; some call it "Conservatism."

Influence of "Outsiders"

Now, the regular manufacturers of pianos and organs fearing the prejudice of the professional musicians who, to a man, opposed the player and with a few exceptions do today, a few men and concerns entirely outside and apart from the regular organ and piano trade took up the manufacture of the player; thus, in order to be even tolerated, the player had to pursue the lines of least resistance. So when the organ and piano manufacturers saw that we were not proposing to put the McTammany player on the market, but, instead, the crude paper-as-a-valve device with its sheet corresponding to the width of the keyboard, they concluded to withdraw their opposition and let us proceed; but if they construed our action to be an unconditional surrender or total abandonment of our plans, they were mistaken.

Instead of abandoning our original determination, we were only "stooping to conquer." The further development

and improvement of the McTammany system kept on apace and this development and improvement will continue. But the perforated paper musical instrument industry was growing and those engaged in it were making money, and when a business is growing and making money, it requires more than prejudice and conservatism to restrain its progress. One manufacturer alone was turning out about 50,000 instruments annually and there were others, and the next thing the musical profession realized was that the wide sheet had been displaced by the narrow sheet on rolls and an intervening mechanism between the sheet and the sound producing devices. So that the player was even more of a thorn in the flesh than it had been before, and, as a matter of fact, the bitterness of the "profesh" against the player was in direct ratio to its improvement and growth which only goes to show that, instead of opposing the player because it would lower and degrade existing musical standards, as a matter of fact they feared it and opposed it because they saw in it a competitor to public favor and financial returns.

Changes in Player Mechanism

But the player was still objectionable. It contained the finger mechanism and the primary system was wanting, but at the very moment that the teachers and professional musicians were consoling themselves about these player shortcomings, the player manufacturers were preparing to launch upon the market an instrument without the foregoing offensive characteristics, and so the march of progress kept up and the further development of the player kept up, and the instrument pursued the even tenor of its way, with none to molest it or make it afraid. And thus the player advanced by stages.

First, the wide sheet with the paper as a valve, discarding crank-handle.

Second, the narrow sheet with fingers and intervening mechanism.

Third, the elimination of the fingers and the substitution of the primary pneumatic.

But up to this time the application of the player mechanism had been confined to reed instruments, the piano manufacturers having successfully resisted the introduction of the player mechanism into the piano; but, in the meantime, the manufacturers of players had grown strong and the manufacturers were beginning to properly interpret the handwriting on the wall, "Mene, Mene Tekel Upharsin," which, being interpreted, reads, "Thy days are numbered. Thou art weighed in a balance and found wanting." With all its excellencies, with all its sacred associations and historical renown, the piano of Cristofori, the grand old master, was a thing of the past and must make way for modern progress with all its great and well recognized merits. The Cristofori instrument was a mute and silent piano, but John McTammany had breathed the breath of life within its wooden walls and henceforth it had ceased to be voiceless and now was to all intents and purposes a living, breathing thing, demanding the right to fulfil its mission by taking up its abode within the sacred precincts of the piano, and again the battle was on.

Powerful Opposition Offered

Never, never would the Chickerings, Knabes, Steinways, and Behnings allow the sacred confines of their pianos to be degraded by the introduction of the player mechanism within them; but little by little, gradually, almost imperceptibly, the player was encroaching upon and usurping the prior prerogatives of the Cristofori pianoforte, and it was only a matter of time until the player would command the situation and dictate the future policy of the trade. So the player manufacturers, having fully developed the player mechanism in connection with reed and pipe organs, were now ready to introduce it into the piano, and all that stood in the way was the bitter, unreasoning opposition of the piano manufacturers, backed by the teachers and professional musicians.

On the other hand were the dealers and back of them the people, and as usual the Lord was on the side of the biggest battalions; but the player manufacturers had grown too strong to allow themselves to be led by the piano manufacturers, and lost no time in impressing that fact upon the minds of the piano manufacturers, and volunteered the further information that they would introduce the player mechanism into any piano they saw fit. Whereupon the piano manufacturers thought they would prosecute any man or firm found guilty of introducing the player mechanism into their pianos. So the gauntlet was thrown down by the piano manufacturers and as promptly taken up by the manufacturers of the player, and the war was on.

Meanwhile, and as early as 1880, the writer, Needham, Fowler, Gally and others had succeeded in applying the player mechanism to the piano, and later Theodore Brown, of Brown & Simpson, had actually introduced the player mechanism within the upright piano and was proposing to place the same upon the market. It was a difficult and expensive undertaking, but Brown accomplished his purpose.

Era of the Cabinet Player

Thus the piano manufacturers discovered to their sorrow that they could not suppress the player, and after they had come to that conclusion, it occurred to them that they might control it to their own advantage by allowing the player mechanism in the form of a cabinet, known as the piano-player, in contradistinction to the player piano. This solution of the subject was accepted by both sides of the controversy and a large trade in cabinet piano-players was built, but the end was not yet. The player men, with that aggressive characteristic of the young and the new, refused to be held back from fulfilling their mission, and without any further ado took the bit in their teeth and started to put the player mechanism into anything and everything they saw fit, and that regardless of the delicate disfavor of the "profesh" or piano manufacturers. A few held back and fussed and fumed for a year or two after everybody else recognized the inevitable and prepared to govern themselves accordingly. But even Mahomet had to come to the mountain.

Why Double Primary?

So from previous chapters, I have shown that first we had the pneumatic system without primary; then the single primary; and finally the double primary. But why a double primary, if it is superfluous?—and that is what it seems to me. Now, if a single primary will respond as quickly and is as cheap, it certainly is more simple and direct, and

if in other respects it is all that can be claimed for the double system, then I stand ready as sponsor for the single system. There can be no defense of the primary unless it is on the ground of greater rapidity of execution, but the friends of the single system challenge and stand ready to meet the double primary men at any time or place to fight the issue to a finish. But the question is, who invented the second primary system and wherein is its value to the trade?

An additional primary now and then is relished by the best of men, and so some of our player experts have evidently come to the conclusion that an extra primary or even an additional primary system was neither here nor there in the make-up of the player; but I do not agree with them. I hold that what brevity is to wit, simplicity is to mechanism; and, furthermore, when you have found the simplest mechanism to perform a certain function, in ninety-nine cases out of a hundred you have discovered the best means for the purpose, no matter what the function or purpose may be. There may be exceptions, but as a rule it is never wisdom to employ two parts if one will serve the purpose as well or better.

In the early history of the reed and pipe organ, it was considered sufficient to have one stop for each four or five octaves, or set of reeds or pipes, as the case might be. Then some organ manufacturers for some one of a number of reasons which might be enumerated, concluded to divide each set of reeds and have one stop for each division or half set of reeds or pipes, or two stops for each set of reeds.

The Immortal Daniel Beatty

But the men who did the foregoing things were mere novices like the single primary men. The eternal fitness of things had never entered their heads or their hearts, but the time was coming and was not far off when the man of genius should come forth from obscurity and solve the organ stop problem at once and forever, and, as the immortal Byron burst forth to startle and amaze a wondering world, so the immortal Daniel F. Beatty, with his transcendant mechanical genius, came to the rescue and cut the Gordian knot that bound the present to the past. Daniel, being a natural scientist, went at the organ stop question, and by means of his wonderful scientific attainments and the application of the laws governing addition, subtraction and multiplication evolved the fact that the exact proportion of stops to reeds was in the ratio of two octaves of stops to each octave of reeds, and having made this discovery the immortal Daniel, Mayor of Washington and candidate for President, not only went forth proclaiming his great discovery but went on conquering and to conquer in the reed organ business until he amassed a great misfortune.

So there are some people in the player game today who would multiply pneumatics regardless of the necessity of such multiplication.

Now there ought to be some way, and as a matter of fact there is a way, to determine just exactly how many primary pneumatics are necessary to answer the purpose. One man says there must be two primaries, while another authority, just as good, says that one primary is ample. And so the pneumatic experts are like a house divided against itself, and that being the case, how can I, or how can anybody, determine which division is right. In fact, it is one of those issues that time alone will settle. So for the present, the writer declines to decide who first introduced the double primary. I did it as early as 1880. If any one can antedate me, let him come forward.

THE PLAYER PIANO VS. THE PIANO PLAYER

ELEVATION and declension have marked the history of the human race. At one time Humanity was ascending the ladder of Progress, at another time it has been, as with Rome, on the decline, at one time, as with the Grecians, we had reached the very pinnacle of artistic perfection, then again the race has gone down, fallen from its high estate and we have "The Dark Ages."

And what is true of the race socially and physically is equally true commercially. Upwards and downwards, backwards and forwards, our progress has marched, so that one eminent writer was led to observe that we advance by circles, each circle rising just a little higher than its predecessor.

So in the development of the player, there have been times of progress and advancement, and then again there have been times when the opposite was true; and it is of such a time that this chapter has to deal. My player of 1876 represented my ideal of what the player should be, considering the state of the art at that time, but its adoption was objected to by the trade as likely to arouse the prejudice of teachers, musicians and composers. On the other hand, capitalists outside of the trade declined to invest money in the manufacture of an instrument that was bound to meet the hostility of teachers and professional musicians. Therefore, instead of attempting to manufacture full-fledged players after the St. Louis type, it was determined to manufacture toy reed instruments, such as the eight reed trumpetto, blown by the mouth, or the little fourteen reed organette, operated by hand crank. These could be made and sold without arousing the hostility of the musical profession and the manufacturers, hence the introduction of the aforesaid instruments, the sale of which rapidly reached great proportions and indicated the trend of the trade.

The Organette and the Trumpetto

The trumpetto and the organette were built on the paper-as-a-valve principle—i. e., there was no intervening mechanism, the air going directly through perforations in the sheet against the tongue of the reed; later the fingers and intervening mechanism were introduced, and thus gradually the scale and capacity of the instruments increased and the growth of the business was great and steady. I have referred to the Gally, Needham and Fowler applications of the player principles to the piano and also to my own adaptation of the player mechanism to the Taylor & Farley and Taber organs, and also to the successful application of the system to the Hallet & Cumston square piano in 1880 without arousing a protest on the part of musicians or manufacturers. There was objection, of course, and denunciation going on all the time, but it was not organized and therefore comparatively ineffective.

So the attempts to apply the player mechanism to the piano grew apace and finally along about 1891 Theodore P. Brown, of Worcester, determined to go at it in a systematic and businesslike manner. What Needham, Gally, Fowler, the writer and others were doing in a desultory and half hearted way, Theodore P. Brown went at systematically, concluding that the application of the player mechanism to the piano was not only practicable but desirable. He knew that it had been successfully applied to organs, and he could not think of any reason why it could not be applied to the piano. So in or about the year 1891 he organized a plant and went to work, developing and manufacturing the player on substantially its present lines. This action on the part of Theodore P. Brown led to much discussion both within and without the trade, and considerable feeling was engendered as a result of Brown's action.

Brown's "Eriol" Piano

Finally the instrument, under the title of the "Eriol Piano," was placed upon the market, and while a few of them were sold, yet the venture did not prove a success; and if I were called upon to give a reason for the failure of the "Eriol," I should unhesitatingly reply, "Prejudice, pure and simple."

But while Brown's efforts were not crowned with success, yet he had forced the issue. The piano manufacturers were beginning to see the handwriting on the wall, and had been trying to devise some means to appease the friends of the player; the player principles had been successfully applied to organs; a large and profitable business had been built up; and its application to the piano was inevitable and unavoidable.

So the piano manufacturers took counsel of each other and while they still flatly refused to introduce the player mechanism within the walls of their pianos or permit others to do so, they would nevertheless agree to let the player manufacturers apply a cabinet attachment to the keyboard of the piano, and then and there took place one of those occurrences that seem like turning back the hands on the face of the clock of nature, a time when the onward march of progress was stayed and the player industry compelled

to mark time while the conservative elements in the trade were being converted to the real importance and mighty mission of the player.

Oh, Conservatism, what crimes are committed in thy name! Hence, the caption of this article, "Elevation and Declension."

Player Receives a Setback

Up to this time the growth of the player industry had been steady and sure; now it was checked; it had received a setback. The piano manufacturers were too strong for the player men to resist, so they concluded to accept the situation and make the most of it. Therefore, the friends of the player system set to work to develop a keyboard attachment for the piano, known as the "piano player," in contradistinction to the present player piano or inside player; and among the number of those who bowed to the will of the piano men was Theodore P. Brown, who discontinued the manufacture of the Eriol or player piano and put a keyboard attachment on the market under the title of Simplex, and by this one act the progress of the player was retarded at least ten years.

"But ever the right comes uppermost
And ever is justice done."

And the day came when the piano player was set aside together with the conservatives and standpatters who had forced it upon us as a compromise, and so, as human history is made up largely of the mistakes of humanity, the player historian finds himself confronted with the mistakes of those who arrogated to themselves all the wisdom of pianodom, and the adoption of the keyboard attachment was one of those mistakes. Nor was the keyboard attachment for pianos anything new under the sun; it had already been tried in the balance of commercial experience and found wanting.

And thus we are called upon to write a page in the history of the player that never should have been written. Theodore P. Brown was right, the men who looked with indifference and contempt upon his efforts were wrong, and had Brown received the encouragement and co-operation he deserved, he might today be at the head of the player procession.

But there are others. Had the Mason & Hamlins and Esteys in 1876 accepted the McTammany inside player, Theodore P. Brown might never have been heard of in connection either with the piano player or the player piano. So it came to pass that through Mason & Hamlin turning the writer down in 1876, Theodore P. Brown was able to turn up as the first to successfully introduce the player mechanism into the upright piano. Others had experimented on this line as early as 1880 and built upright pianos containing the player mechanism in a more or less crude form and had taken out patents on their respective mechanisms, but Brown's attitude, his action and the firm and determined manner in which he set to work to develop the modern player and force it upon the market, entitles him to much credit as a pioneer in the industry.

But while the player piano is purely an American invention, the piano player, that is, the keyboard attachment, was a European product and its inventor, M. Pape, of England, as evidenced by his patent, bearing date of 1851. The next player inventor, and I should say the more successful of the two, was Fourneaux, of France, whose patent is dated 1863. McTammany followed in 1876, M. Gally in 1881, and then came William D. Parker, etc.

THE PLAYER AND THE MUSIC ROLL

THE player is a dual proposition and has to deal not only with the player mechanism, *per se*, but also with the perforated music roll as well. No complete or satisfactory discussion of the player can be carried on without taking into consideration the influence and effect of the perforated roll upon the player mechanism, the destiny of the player being governed by the roll. For it matters not to what state of perfection the player may attain; unless the roll manufacturers keep step with the player manufacturers, no progress can be made.

But what is the fact? Simply this—that while the player manufacturers have been spending dollars in the development of the player mechanism, the roll manufacturers have been reluctantly spending cents and much of the outlay of the latter has been to mighty poor advantage.

I asked an automobile manufacturer a short time ago what was the most objectionable part of the modern automobile and he placed his hand on the pneumatic tire. In like manner, if I were asked to point out the weakest spot of the player, I should respond by putting my finger on the music roll, "and there is a reason." The reason is price cutting, cut-throat competition, which has well nigh ruined the music roll business. For this condition of affairs, the player manufacturers are largely responsible. The player manufacturer cannot demand perfection in the roll while at the same time he is hammering the roll manufacturer on prices. The roll manufacturer, like the laborer, "is worthy of his hire," and if the player manufacturer succeeds in his plan it simply ends in cutting down the quality of the roll, which in turn reacts on the player, inflicting injury on both and thereby retarding the player's progress.

Before preparing a series of articles dealing with the roll, of which this constitutes the first, I visited a number of roll manufacturers East and West and pointed out to them the defects of and objections to the present roll output. There was not one of them but admitted my charges, and in several instances it was pointed out wherein the roll is susceptible of further development and the fact admitted that as a result of such improvement, the player would be correspondingly benefited.

But in each instance the interview ended with the remark that when the player manufacturers and dealers are willing to pay the roll makers a living price, they, the roll manufacturers, will see to it that the roll measures up to the requirements of the player. Thus the advancement of the player has been retarded and must continue to mark time while the roll and player manufacturers haggle over the question of price.

Roll Dates from 1876

The origin and history of the modern music roll dates from the spring of 1876. It was invented by the writer, and prior to that date no roll capable of being wound and rewound in conformity with modern player requirements had ever been embodied in a musical instrument.

The paper did not differ essentially in width or thickness from the paper at present in use in the modern player. A portion of the original sheet is still in existence. It has been repeatedly photographed and the circumstances attending its production have often been described in various papers and periodicals, including the MUSICAL COURIER EXTRA.

The First Music Roll Catalogue

The first printed music catalogue was published in the spring of 1877 and contained less than fifty pieces all told, the original printer's bill being on file in the U. S. Patent Office, Washington, D. C. The following catalogue embodies all that had been embraced in previous catalogues. It contains less than one hundred pieces and was published in 1879. The type of the catalogue remained set up all the time and pieces were added as occasion seemed to require. This is the oldest perforated music catalogue and the only copy of it known to be in existence.

Orrin Ingalls

The first man or firm to enter into the manufacture of perforated music was Orrin Ingalls of Cambridgeport, Mass., and the date, Oct. 8, 1877. A copy of his agreement with John McTammany is herewith annexed. (We also, in this connection, add a leaf from the McTammany catalogue of 1886 as indicating the musical advancement made within the ten years, from 1876 to 1886.)

Today the catalogues of perforated rolls are large and comprehensive books in which the titles are numbered by the hundred, while the musical compositions that have been arranged for the player run into the thousands—hundreds of thousands.

Contrast, if you will, the circular of 1879 with that of 1886, the first embracing scarcely a single piece of classical music, while that of 1886 embodies many classical gems. If the first represents the musical tastes of the masses at the time referred to, which it undoubtedly does, then it is only reasonable to presume that the catalogues of later

CATALOGUE OF MUSIC

PREPARED FOR

THE McTAMMANY ORGANETTE.

Address J. McTAMMANNY, Jr., 511 Main Street,

CAMBRIDGEPORT, MASS., U. S. A.

☞ A complete Catalogue will be issued shortly after January 1st, 1880, which will embrace all the latest and most popular tunes.

SACRED MUSIC.

	Price.
Must Jesus Bear the Cross Alone,	.30
Rock of Ages,	.40
The Morning Light is Breaking,	.35
Antioch,	.20
Nearer my God to Thee,	.50
Italian Hymn,	.35
Boylston,	.35
Home Over There,	.45
Old, Old Story,	.65
We Shall Meet Beyond the River,	.35
Hold the Fort,	.35
Fountain,	.50
Greenville,	.40
Missionary Hymn,	.40
Safe Within the Vail,	.55
Salvation,	.40
Sweet Bye and Bye,	.35
Simply Trusting,	.40
Jewels,	.40
I Need Thee Every Hour,	.30
My Redeemer,	.75
We'll Meet Each Other There,	70
Come Ye Disconsolate,	.50
Jesus Loves Even Me,	.50
What Shall the Harvest be,	.75

POPULAR AIRS.

Annie Laurie,	.40
Coming Through the Rye,	.50
Dixie,	.40
Yankee Doodle,	.40
America,	.30
Wearing of the Green,	.45
Captain Jinks,	.40
Scots Wha Hae,	.30
Marching Through Georgia,	.45
Old Folks at Home,	.35
Whoa Emma,	.45
Mocking Bird,	.70
Home, Sweet Home,	.50
Grandfather's Clock,	.40
Nancy Lee,	.60
Silver Threads,	.35
Joyous Farmer,	.50
Tara's Harp,	.40
Switzers Song of Home,	.30
Babies in Our Block,	.60
Old Oaken Bucket,	.50
Watch on the Rhine,	.65
Killarney,	.60
Love at Home,	.50

OPERATIC.

Pinafore—He is an Englishman,	.60
Pinafore—Little Buttercup,	.60
Pinafore—We Sail the Ocean Blue,	.50
Non Piu Mesta,	.35
How Can I Leave Thee,	.40
Fra Diavolo,	.60

WALTZS.

Little Sweetheart,	.40
Life is a Dream,	.50
Cantilence,	.50
Evangeline,	.60
Little Fairy,	.65
Flora,	.45
Corn Flower,	.60
Starlight,	.40
Cinderella,	.35
Spelling Match,	.50
Spring, Gentle Spring,	.60
Midnight Hour,	.55
Moet & Chandon,	.45

POLKAS.

	Price.
Field Flower,	.40
Hattie,	.45
Alice,	.30
Eva Polka Redowa,	.40

GALOPS.

Favorite,	.30
Equestrian,	.65
Impromptu,	.45

SCHOTTISCHE.

Long Branch,	.50
Little Fairy,	.60
Evangeline,	.65
Schottische, (Favorite),	.35

QUADRILLES.

Caledonian, (complete),	1.30
Lancers No. 1,	.40
Lancers No. 2,	.40
Lancers No. 3,	.50
Lancers No. 4,	.40
Lancers No. 5,	1.00

Music for Quadrilles can be joined together and repeated if desired.

JIGS, CONTRAS, Etc.

Larry O'Gaff,	.30
Speed the Plough,	.30
St. Partrick's Day,	.35
Draw the Sword, Scotland,	.30
Hull's Victory,	.30
Clog,	.30
Girl I left Behind Me,	.30
Fusileer's March,	.35
Chorus Jig,	.45
Arkansas Traveller,	.55
Fisht 's Hornpipe,	.30

EARLIEST ROLL CATALOG, FIRST PRINTED 1877. ABOVE IS COPY OF 1879 REISSUE.

date, with their wealth of classical compositions, represent the musical uplift during the decade between 1876 and 1886; and the question naturally arises, to what agency or instrumentality are we indebted for this musical advancement and progress? Are we to attribute it to the music teachers with the manual piano, or was it Thomas with his orchestra, or Sousa with his band, or the concert, or the operatic stage, or all combined?

No! All these agencies had been in existence for a hundred years prior to 1876, and yet the fact remains that more musical progress, as regards public appreciation, has been made within the past forty years than during the entire previous history of the world. For ten years I kept tabs on the music orders received by our firm with a view to sizing up the musical taste of the masses. The musical catalogues of 1876, 1877 and 1878 represent pretty fairly the taste of the people at that period and indicate the value and effect of the musical agencies in use at that time and previous. It is only fair to assume that the instrumentalities then employed bore no comparison to the modern means, namely, the player and the phonograph, which as an educational and elevating influence eclipse any other, yea, all other agencies combined, in uplifting and stimulating musical appreciation in the present generation.

McTammany Organette Co.

SUPPLEMENT

FOR ORCHESTRONE STYLE 44.

CLASSIC.

Roll 2002	$2.95	Roll 455	$1.40
Iphigenia in Aulis Overture	*Gluck*	Loure (from 3d. Violoncell—Suite)	*Bach*
Roll 2003	$2.05	Roll 454	$1.90
Raymond Overture,	*Thomas*	Fifth Nocturne Op. 52	*Leybach*
Roll 2004	$2 50	Roll 453	$2.90
Night in Grenada Overture	*Kreutzer*	Valse Caprice Op. 31	*Scharwenka*
Roll 2005	$2.50	Roll 452	$1.55
Ruy Blas Overture	*Mendelssohn*	Nun's Prayer	*Oberthur*
Roll 2006	$2.95.	Roll 451	$1.15
Jolly Robbers Overture	*Suppe*	Chanson d'Amour	*Jossefy*
Roll 2007	$2,40	Roll 450	1.75
Coroilan Overture	*Beethoven*	If I were a Bird	*Henselt*
Roll 2008	$2 10	Slumber Song	*Schumann*
Morning, Noon and Night Overture	*Suppe*	Roll 449	$3.60.
		Polonaise No. 2 in E	*Liszt*
Roll 2009	$2.30	Roll 448	$2.15
Die Meistersingers—Walther's Prize Song	*Wagner*	Wanderstunden Song,without Words	*Heller* *Mendelssohn*
Roll 2010	$2.10	Roll 447	$3.10
Namensfeier Overture	*Beethoven*	Fifth Symphony—Allegro	*Haydn*
Roll 2011	$2.90	Roll 446	$1.15
Mireille Overtnre	*Gounod*	Berceuse, Op. 57	*Chopin*
Roll 2012	$2.75	Roll 317	$1.85
Ouverture Romantique	*Kela Bela*	Elevation No. 25	*Batiste*
Roll 458	$2.20	Roll 316	$2.05
Symphony No 7, Presto	*Beethoven*	Romanza for Organ,Op. 34	*Sparks*
Roll 457	$2.90	Roll 315	$2.10
Symphony No. 4. Allegro Vivace	*Beethoven*	Andante for Organ, Op. 122	*Merkel*
Roll 456	$2.40	Roll 314	$1.40
Pastoral Symphony No. 6, Andante	*Beethoven*	Organ Sonata G Minor, Op, 42– Adagio	*Merkel*
		Roll 313	$3.00
		Organ Sonata No. 5, Op. 65	*Mendelssohn*

POPULAR.

Roll 183	$1.20	Roll 187	$1.10
Sweet Rosalie (3 verses)	*Ford*	The Soldiers Farewell 3 verses.	*Kinkel*
Roll 190	$1.85	Roll 186	$1.00
Little Annie Rooney	*Nolan*	Marguerite	*White*
Roll 189	$1.20	Roll 185	$1.80
Down went McGinty	*Flynn*	Swanee River	*Foster*
Roll 188	$1.25	Roll 184	$1.20
Listen to my Tale of Woe. 3 verses.	*Smith*	The Song that reached my heart	*Jordan*

ORCHESTRONE STYLE 44 SUPPLEMENT.

DANCE.

Roll 634	$1.40	Roll 5005	$2.70
Piedmont March	*Harvey*	A Tol (to thee) Waltz,	*Waldteufel*
Roll 5000	$2.05	Roll 5006	$2.30
The Oolah Waltz	*Lecocq*	Thousand and One Nights Waltz	*Strauss*
Roll 5001	$3.20.		
Meerlieder Concert Waltz	*Pugh*	Roll 5007	$1.10
Roll 5002	$1.70	Dancing Vienna Polka	*Strauss*
La Naiade (Valse de Salon	*Thome*	Roll 5008	$1.75
Roll 5003	$1.90	Entr' Acte Gavotte	*Gillet*
Weiner Bon-Bons Waltz	*Strauss*	Roll 5009	$2.25
Roll 5004	$2.60	Roses from the South Waltz	*Strauss*
Auf Wiederseln Waltz	*Bailey*		

OPERATIC.

Roll 299	$2.60	Valse
La Perichole	*Offenbach*	Tipsy Song
Letter Song		Le Chanteur et la chanteuse

McTAMMANY ORGANETTE CO.,

MANUFACTURERS AND DEALERS OF

Automatic Musical Instruments

AND MUSIC.

WORCESTER, - - MASS.

MUSIC ROLL CATALOG PRINTED IN 1886. NOTE THE CLASSICAL MUSIC.

State of Connecticut, } ss. Stamford.
County of Fairfield }

John McTammany, of said Stamford, being duly sworn, deposes and says:

1. That he is the "John McTammany, Jr.," the party of the second part mentioned in a certain memorandum of an

agreement made October 8, 1878, with "Orrin Ingalls," a copy of which said agreement was printed and published in the "Cambridge Chronicle" in its issue of January 10, 1880.

2. That said printed copy was compared by him on or about said January 10, 1880, with the original then in his possession, and that the same was a true and perfect copy thereof:

3. That the following is also a true and correct copy or transcript of said original copy of said agreement, to wit:

"This memorandum of agreement made this 8th day of October A .D. 1877, betwen Orrin Ingalls of Cambridgeport, County of Middlesex, State of Massachusetts, and John McTammany, Jr. of Boston, County of Suffolk in said State, witnesseth:

That whereas said McTammany has invented an automatic organ, the music for which is perforated on paper, and whereas said Ingalls is desirous of supplying said music in manner and form as said McTammany shall direct by sample in either case: Now therefore the said parties agree as follows:

(1) This contract shall continue and be in force for and during one year from date hereof.

(2) Said McTammany agrees that all music to be made for said organs during said term shall be made by said Ingalls, so long as the work is done in a proper and workmanlike manner and suitable for the purpose intended; and to pay to said Ingalls twelve and one half (12½) cents for each sheet or composition made by said Ingalls.

(3) Said Ingalls agrees to fill the orders, given by said McTammany to the above effect, with reasonable promptness, and to do said work in a proper and workmanlike manner.

Witness our hands and seals on the date aforenamed.

O. INGALLS
J. McTAMMANY, JR."

Witness, J. M. Gould.

Subscribed and sworn to this 2nd day of June A. D. 1909, before me.

L. A. BRIGGS.
G. O. SAMPSON, Notary Public.

AIR ENGINES.

I HAVE used the term "air" or wind engine in contradistinction to the term "motor" to avoid confusion of terms—pneumatic motor, for the purpose of this work, meaning the large or striking pneumatic which is adapted to actuate a hammer in a piano or open the valve in an organ, while the term "air engine" is intended to denote the machine which feeds the sheet and winds and rewinds the music rolls.

Air engines are of several kinds or designs:

First: the rotary engine as illustrated and described in my Caveat filed September (7) 1876.

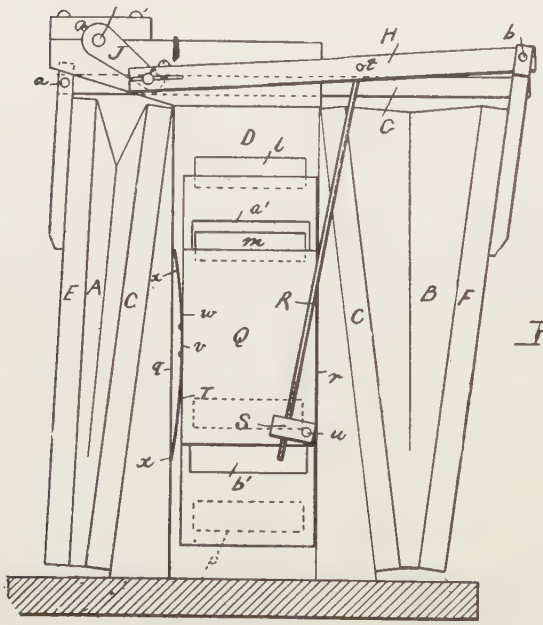

KELLY PATENT.

Second: my intermittent engine of 1880, shown and described in my patent No. 390,386.

Third: The combination of rotary and reciprocating engine illustrated in patent to Lucius T. Stanley, dated July 21, 1885.

Fourth: Joint patent of Parker and McTammany, dated Dec. 1886, No. 355,201.

Fifth: Patent to George B. Kelly, dated Feb. 15, 1887, No. 357.

While hundreds of others have been invented and some of them used in connection with the player, yet no radical variation can be found between them and the aforementioned, which seem to embody all the essential elements and desirable features of the modern air-engine.

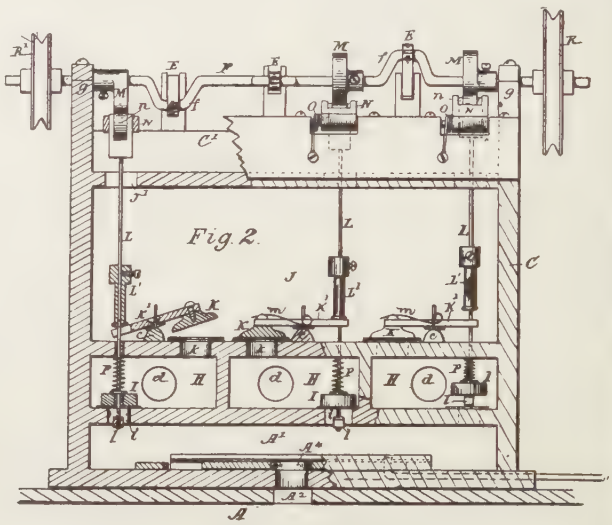

PARKER PATENT.

The dream of inventors for five hundred years has been a practical rotary engine, but not until the present

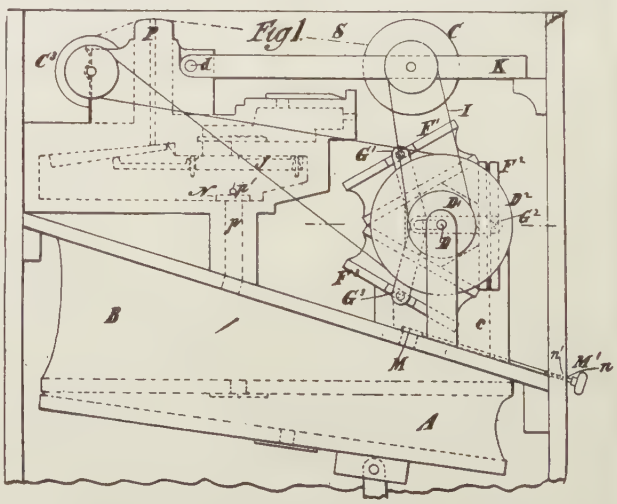

STANLEY PATENT.

turbine system in vogue in our ocean greyhounds was devised has anything practical in that line been evolved.

The rotary engine has the advantage of cheapness and simplicity, but at the expense of power. The reciprocating engine conserves the power but is more costly and complicated. Consequently in developing the player, it was but natural that I should employ in its construction the simplest and cheapest wind engine available; hence the rotary wind engine shown and described in my caveat of 1876, illustrating my player of the same year, which was the first instance on record of a music sheet and rolls being actuated by a wind engine of any kind for the purpose of producing music.

While I employed the rotary motor at that time, yet I knew that it could not be regarded as a finality, but that some more practical means must and would be devised later. There were two objections to the permanent use of the rotary motor: first, the waste of power, and second, the sound made by the air running through the motor and into the bellows.

Therefore, immediately upon completing my arrangement with William D. Parker in 1880, I built another instrument into which I introduced the principal elements of the present reciprocating wind engine: viz., the reciprocating pneumatic motor and primary pneumatic cut off. (See my Patent No. 390,386.) I have previously explained why this patent bears date of October 2, 1888, instead of 1880, as it should; but the engine above described was also objectionable by reason of its intermittent motion. Therefore, it was redesigned by Parker and the writer jointly, and rebuilt.

This may be said to have been the first practical and satisfactory reciprocating wind engine introduced into the modern player, and there has been no radical improvement over that wind engine from that day to this. (See Parker Patent No. 355,201.) If there existed any objection to the Parker air engine, it was to the cut off valve system which was subject to more or less suction or pluck, and it was probably that fact and a desire for conservation of power that led George B. Kelly to adopt the sliding valve system, shown and described in his Patent No. 357,933, dated February 15, 1887.

THE SPRING MOTOR

IN last week's issue, I dwelt upon the origin and development of the air engine for feeding, winding and rewinding the music sheet. In this week's number, I shall devote myself to a corresponding description of the spring motor employed by certain manufacturers as a substitute for the wind engine.

The question is often asked which of these engines is best adapted for the purpose of feeding the sheet and winding the rolls. In reply to that query, I have invariably said that I do not know, and I don't. I invented both, patented both and used both in player construction, but I never pitted one system against the other with the determination of ascertaining which mechanism contained the largest number of points of excellence, and until I or some one else has taken hold of the subject with a view to contrasting and comparing them by scientific methods, no one can intelligently answer the question at issue.

While I claim, and my patents prove, that I was the first to invent, manufacture and offer for sale players containing air and spring motors for feeding, winding and rewinding the music sheet, yet to Melville Clark belongs the

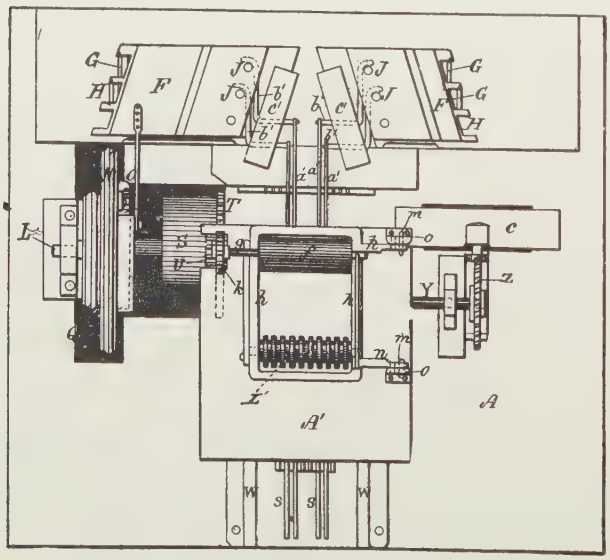

McTAMMANY PATENT No. 290,697.

honor of working out the details of the spring motor and demonstrating that there was no desired musical effect possible by means of the air engine that he could not imitate or reproduce by the use of the spring motor. The success of the Clark product throughout the world cannot be regarded otherwise than as a vindication of his wisdom and judgment. It is true, and the accompanying illustrations will show, that Theo. P. Brown of Worcester also

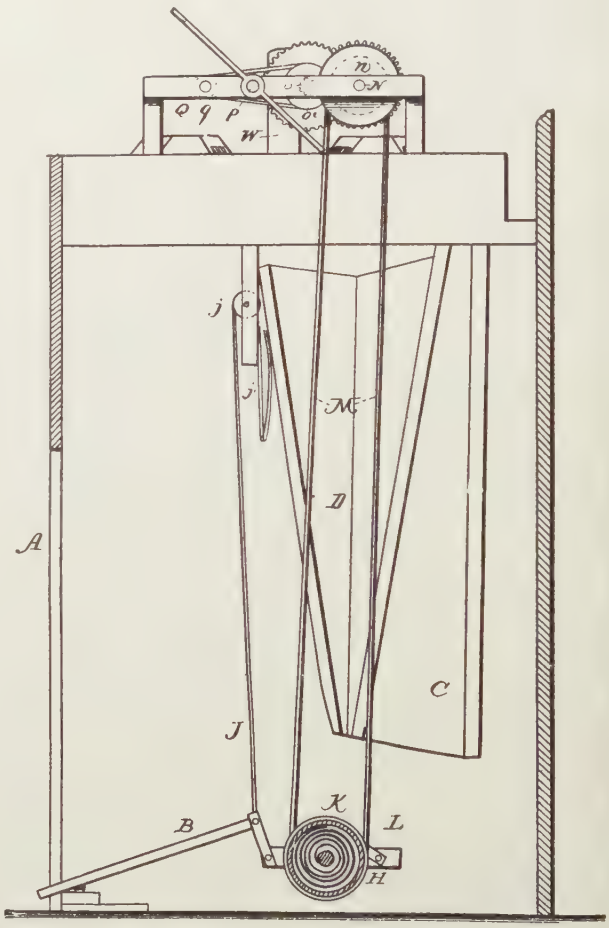

McTAMMANY PATENT No. 390,385.

employed the spring motor in introducing the Aeriol Piano, but in doing so he employed the Clark mechanism and methods. But the question remains, and like Banquo's ghost, will not down. I hear it every day or two: "What advantages has the wind engine over the spring motor?" and echo answers: "What?"

For every hour of time, every dollar of money, every ounce of gray matter, that has been expended upon the de-

velopment and promotion of the spring motor, one thousand times as much has been squandered in the improvement and advertisement of the wind engine. Marvel not, therefore, if a hundred air engines are manufactured and sold for every spring motor disposed of to the trade. But in my experimental work, covering a period of fully fifty years, one fact works out both in practice and theory. Take, for instance, the typewriter—how often is the question asked, "Which is the best typewriting machine?" Who can tell? I can't. I only know that each one has some desirable features, but no one embodies all the excellencies

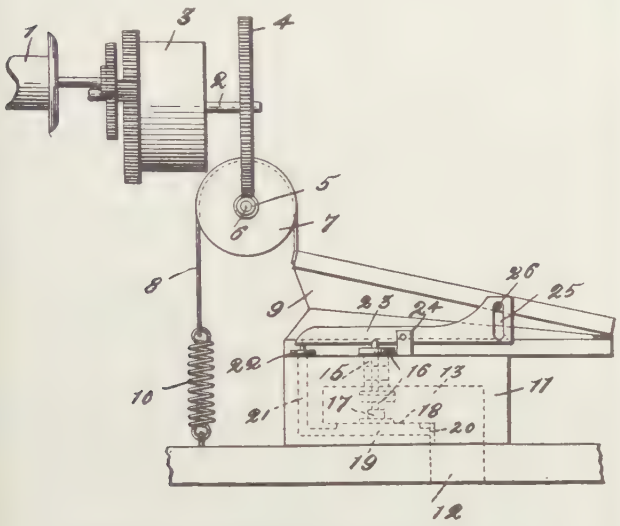

BROWN WINDING MECHANISM—No. 696,090.

of all of the machines; and so it will probably be found by the man who elects to try out the wind and spring motors. One will be discovered to comprise certain excellencies and advantages, while the other will embrace certain other equally desirable advantages.

Spring vs. Air

In the employment of the spring motor in connection with the player, we were confronted with a number of difficulties unknown to the wind engine, and especially in relation to the spood. To increase or diminish the speed of the wind engine, it was only necessary to enlarge or reduce the port or orifice, admitting or governing the amount of air admitted to the engine.

With the spring motor, it was different. The movement of the foot pedal controlling the spring had to move in harmony with the other foot pedal. It would have been impractical to operate one pedal at one degree of speed and the other at an entirely different motion; and if you operated both pedals in the normal way, then the spring was being wound up faster than it could run down in playing the music.

It became necessary, therefore, to have some means to govern the feed of the spring. This was accomplished in my patent of December 25, 1883 (application for which was filed March 6, 1879) by means of the shield (*F*) that intervened between the pawl (*O*) and the ratchet-toothed wheel (*P*), so that by use of a stop or lever under the control of the performer, the tempo could be adjusted or modified by the operator at will.

In my application of March 19, 1886, while I employ the same elements and produce the same results, yet I accomplish it in an entirely different manner, getting a more uniform speed and greater control of the tempo.

In the latter case, I introduce the transverse shaft E, which has upon it two ratchet wheels F, that turn there-

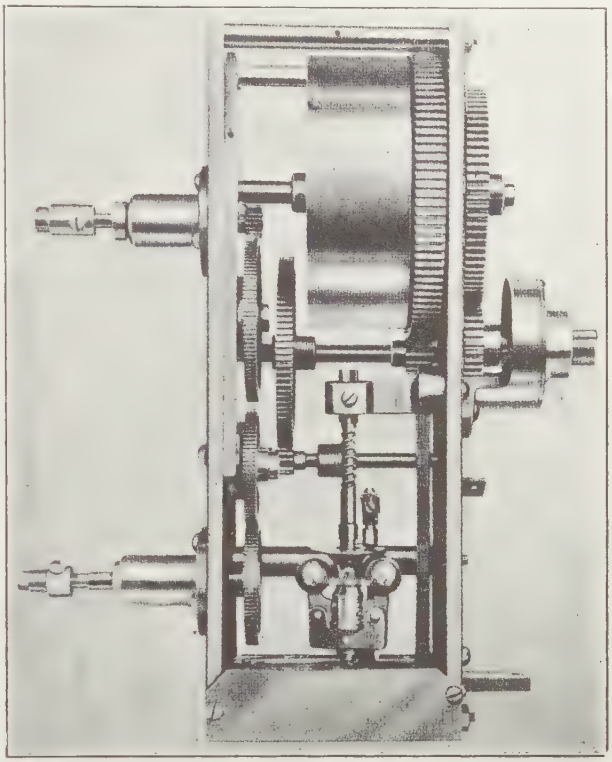

CLARK WINDING MECHANISM.

with, motion being given to said shaft by means of pawls G. These pawls are attached to levers H, of the first kind, which are mounted loosely on said shaft, the outer ends of said levers being connected to said pedals, respectively by links I; all of which will be found explained in detail in my patent No. 390,385, October 2, 1888.

Clark's Achievement

All that I accomplished by the applications referred to, and even more, was achieved by Melville Clark some years later, when, in the development of the Apollo, he was confronted by the same problems. He, of course, employed substantially the same elements, only he put them in different form. It has been claimed that Clark did not invent or design the spring motor in the Apollo, that it was for sale, intact, in the open market; and while it is true that spring motors of one kind and another can and have been bought in the open market, yet the writer knows of no spring motor for sale in the open market, even today, that could be employed to operate a player without alterations and modifications that would amount to invention.

Theodore P. Brown's experiments in connection with the spring motor were principally attempts to improve the Clark mechanism, efforts which were abandoned when he discontinued the manufacture of the Aeriol.

THE FOOT PEDAL MECHANISM

THE propriety of dividing and subdividing the player elements in order to set forth more clearly the player's growth and development never was more forcibly impressed upon the writer's mind than in dealing with the foot pedal mechanism for the actuation of the bellows exhausters, patents by the hundred having been granted upon this subject alone.

The player mechanism having been developed in connection with the ordinary cabinet or reed organ, it was

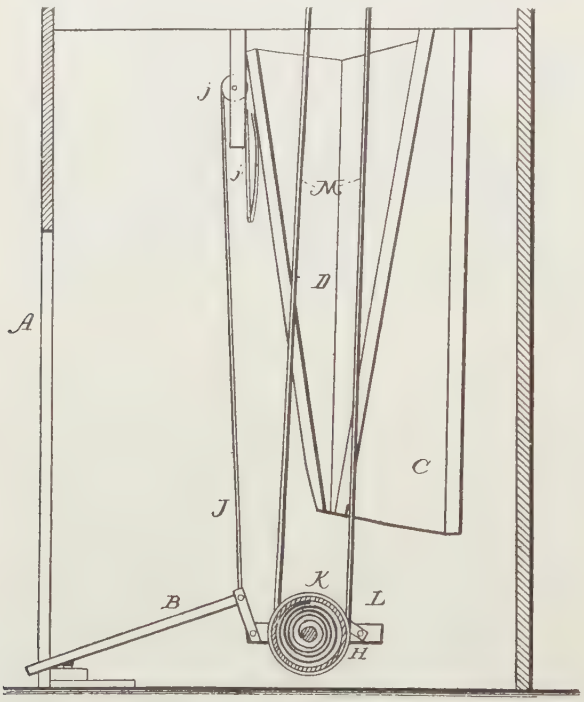

McTAMMANY PATENT

but natural that inventors should deviate as little as possible from established usages, and particularly so, as there were too many other difficulties to contend with to warrent the inventor in undertaking to develop the foot pedal mechanism simultaneously with the other parts. The inventor, in developing the player, followed the lines of least resistance. But having finally overcome the various other difficulties that obstructed his progress, the player inventor turned his attention to the foot pedal mechanism with a view, first, to reduce the unnecessary friction resulting from the mechanism and construction in common use at that time, which consisted of a hinged pedal, B, strap, J, roller bearing, j, and exhauster, D, as shown in patent to John McTammany, No. 390,385. Still another application of substantially the same principle is illustrated by patent to E. S. Votey, No. 650,285, wherein he materially reduces the friction of the roller strap of the

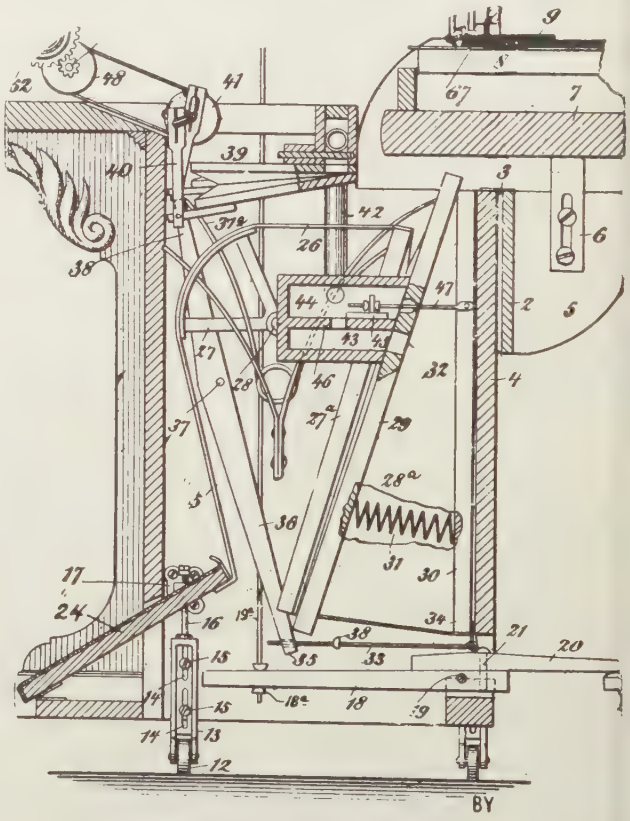

VOTEY PATENT.

McTammany plan, by the introduction of the segmental lever 27, pivoted at 28. But the webbing and roller had been tried in the balance and found wanting; the webbing would wear out, the friction roller would get dry and make a screeching noise, and the decision that it must go had been rendered.

Such being the case, the minds of the player inventors of the country were focused upon the foot pedals, with

the determination to simplify the mechanism, eliminate friction, and reduce the cost; and among the early applicants for an improved foot pedal mechanism was Charles A. Needham, whose patent is No. 221,696, wherein he shows a foot pedal, D, and a fulcrumed connection, D, between the foot pedal, D, and the balance wheel, I. Somewhat similar is the mechanism for the same purpose, invented and patented by E. P. Needham (see patent No. 221,343), but in both these cases the movement of the pedal was rigid and arbitrary and operated on substantially the same principle as the foot pedal of a sewing machine; and although considerable business was done

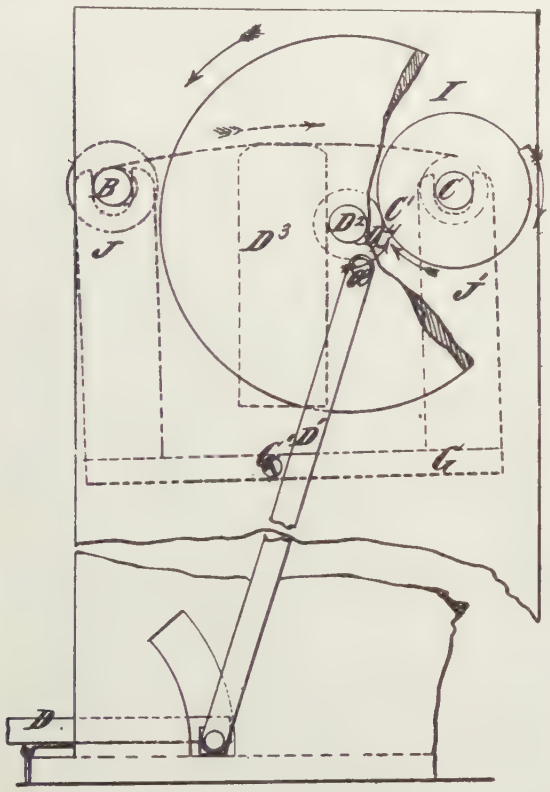

NEEDHAM PATENT.

in instruments of this kind, yet by its very nature, it could not finally satisfy. M. Gally's patent No. 249,330 is also banned for the same reason.

On April 9, 1887, there was issued to C. A. Kuster patent No. 361,299, which had the advantage of being simple in construction, elastic underfoot, and fairly practical, doing away with the strap and friction roller. That was soon destined to be superseded by mechanism still better adapted for the purpose, as evidenced by patent to W. D. Parker, No. 470,323, March 8, 1892, and No. 587,270, July 27, 1897. But subsequent events plainly showed that even these later inventions and improvements fell far short of the possibilities and actual requirements.

The late Charles T. Sissons of Chicago made an exhaustive investigation of the subject of the player and wrote a series of articles on the question, which were printed in a western publication. In these articles he gave the full and entire credit of its invention to the writer. In his final summing up, he took the position that whoever invented the perforated roll was entitled to the credit of having invented the player piano; and the evidence being overwhelmingly in favor of the writer, he rendered his decision accordingly.

But while others agreed with him, that the roll was an important factor in the make-up of the player, they claimed that the real foundation of the player was not the roll but the foot pedal mechanism. They knew that the writer's claim to the invention of the perforated roll had been sustained by a series of Patent Office decisions, but were not aware that the Patent Office, in rendering a decision in the case of McTammany versus Horton, on interference, had given the writer a broad based claim on the foot pedal mechanism; as witness the following claim

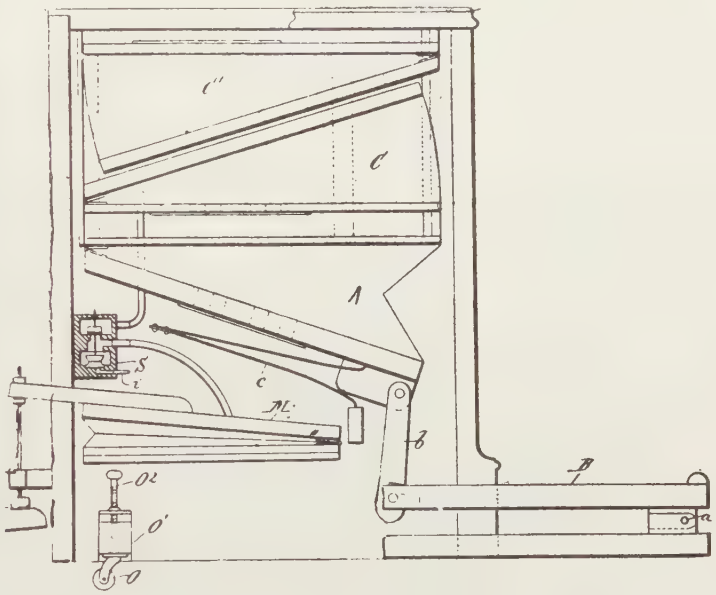

KUSTER PATENT.

I, from McTammany's patent No. 290,697 of December 25, 1883, filed March 6, 1883.

"In an automatic musical instrument, adapted to be governed by a perforated music sheet, the combination of the reeds, reed cells, and bellows, with a pedal and means operated by said pedal for opening and closing said cells, substantially as set forth."

The foregoing claim is broad enough to include the piano also, as it would not amount to invention to substitute a piano hammer and string for the valve and reed of the organ; so that it matters not whether the reader regards the roll or the foot pedal as the most vital element on which to build up the superstructure of the player, the writer claims both elements as his inventions, and can, therefore, have no bias on the subject. In fact, far from ignoring the value and importance of the foot pedal mechanism in its bearing upon the development and future of the player, I know of no one who has written or emphasized the point at issue more than the writer; as witness, the subjoined extract from a letter sent by me to the Kroeger Piano Company two weeks ago, in answer to the foot pedal question. After dealing with various player

problems, I took up the foot pedal issue and replied thereto:

"The next important question in my opinion is the ease of action, and this feature is going to be more of a determining factor in the future than it has been in the past. It ought to. And I believe it is possible to so reduce friction and leakage that even a child or elderly person could operate the instrument with ease, comfort and satisfaction."

That is the function of the foot pedal mechanism and it is a subject which is worthy of the earnest consideration of the greatest mechanical experts in the player industry.

It is not my intention to pass upon the merits of the different inventions or inventors that I am presenting to the readers, nor to sit in judgment on these matters, but simply to trace the state of the art, step by step, to the end that the future player student and investigator may be enabled to understand how and why certain things came to pass, during the forty years devoted to the development of the player.

The student of the locomotive, if confronted with "Puffing Billy," the first of its kind, and one of our latest one

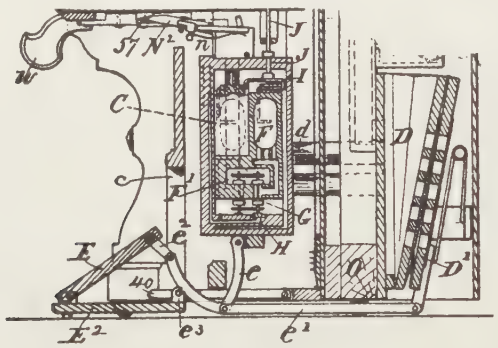

PARKER PATENT.

hundred ton "Moguls," would be struck by the difference in size, weight, capacity, as well as general appearance of the two machines; but stretching between those two engines was an interval of one hundred years, during which the mechanical ingenuity of the civilized world was wrestling with the problem of the locomotive's development. And if ever the statement was true in regard to any piece of mechanism, that "necessity is the mother of invention," that statement is true of the locomotive.

And so, in like manner, when the student of the player is confronted with the old harmonium of fifty years ago, with its foot-pedal strap and pulley, and he compares it with such a mechanism as the latest improved Gulbransen, designed for the same purpose, he is struck by the wonderful superiority, simplicity and directness of the modern mechanism as contrasted with the old; but that difference represents years of experiment and the expenditure of the inventive genius of the player industry.

Advancement and improvement of the player was the order of the day, and the present product is the result. It was not only necessary that the player should play well; it was essential that it should be well constructed, i. e., that it should be built on scientific lines; and not only that, but some regard must be paid to appearances—it must look well. For forty years with the three foregoing objects in view, the musical, mechanical and artistic genius of the nation has been focused upon the player with a view to its further improvement and perfection. So, with the minds of a Gulbransen, a Wright, a Klugh, a Welin, and a hundred others that I could name, concentrating their minds upon the pedal mechanism, the results were bound to come. In consequence, we have the modern foot pedal mechanism, with its simplicity, directness, durability and inexpensiveness.

Hence, while I have always claimed that the player mechanism was my invention, and do so now, yet I cannot

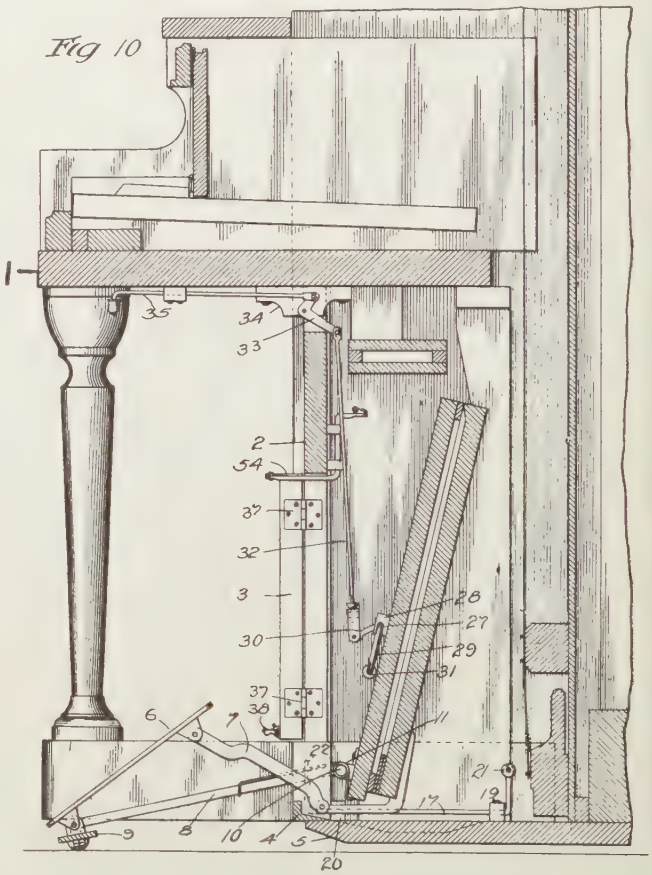

KLUGH PATENT, SEPTEMBER 5, 1911.

look upon this musical marvel, the modern player, without looking into the eyes of a Gally, a Parker, a Salmon, a Gulbransen, and a host of others, who have in one way and another contributed to its improvement and perfection.

Gulbransen Pedal Mechanism Patent of October 12, 1909

Referring to the Gulbransen patent No. 417,187, dated October 12, 1909, application filed February 21, 1908, and herein illustrated, it reads as follows:

To all whom it may concern:

Be it known that I, AXEL G. GULBRANSEN, citizen of the United States, residing at Chicago, in the county of

Cook and State of Illinois, have invented a certain new and useful Improvement in Pedal Mechanism, of which the following is a full, clear, concise, and exact description, reference being had to the accompanying drawings, forming a part of this specification.

My invention relates to pedal mechanism for pneumatically operated instruments such as pianos, the object being to provide simple and efficient detachable pedal mechanism, which can easily be applied and manipulated.

My invention belongs to that class of pedal mechanisms which, when not in use, are below or within the piano casing and which, when to be used, are drawn forwardly into position in front of the piano.

It is clear, then, from the foregoing, what the needs of the art were and the mechanism shown and described indicates the agencies and instrumentalities employed by him to meet the emergency.

On November 27, 1908, Gulbransen again invades the Patent Office with a further improvement in foot pedal mechanism, upon which a patent was granted October 11, 1910, and the specification of which reads as follows:

A. G. Gulbransen Patent of October 11, 1910

To all whom it may concern:

Be it known that I, AXEL G. GULBRANSEN, a citizen of the United States, residing at Chicago, in the county of Cook and State of Illinois, have invented a certain new and useful Improvement in Pedal Mechanism for Pneumatically-Operated Pianos (Case No. 9), of which the following is a full, clear, concise, and exact description, reference being had to the accompanying drawings, forming a part of this specification.

My invention relates to pedal mechanism for pneumatically-operated pianos and may be considered as an improvement over the invention disclosed in my co-pending application, Serial No. 417,187, filed February 21, 1908.

In the co-pending application referred to, special complicated mechanism is shown for locking the pedal frame in its "out" position, a special controlling lever being necessary.

The main object of my present invention is to provide more simple and automatic means for locking the pedal mechanism in its "out" position.

Several features of improved mechanical arrangements are also involved in my invention, which will be understood when described by reference to the accompanying drawings in which—

Thus it will be seen that the patents issued and applied for from time to time proceed first to show what the shortcomings of the player are and the remedy proposed to overcome it; so that in the foregoing, we have Gulbransen's point of view, i. e., a picture of the player as he sees it, its defects, objections and, on the other hand, you have his remedy.

Klugh's Mechanism for Disposing and Concealing Pedal Mechanism

Paul B. Klugh, who has devoted much time to investigation and experiment upon the subject, and one of whose patents is herewith illustrated, reveals the condition of the player development in his specifications when he suggests the need of a "mechanism for disposing and concealing" the pedal mechanism. Klugh's application was filed April 9, 1909, and the patent was issued September 5, 1911. In his specifications he comments as follows:

To all whom it may concern:

Be it known that I, PAUL BROWN KLUGH, a citizen of the United States, residing at Chicago, in the county of Cook and State of Illinois, have invented new and useful Improvements in Mechanism for Disposing and Concealing Musical-Instrument Pedals, of which the following is a specification.

My invention relates to that class of musical instruments having pedals which may be folded or otherwise disposed within the instrument case and more particularly to pianos or similar instruments provided with interior player-mechanism in which pedals, manually-operable devices and possibly other parts concerned with such mechanism may be alternately exposed for use and disposed within or concealed by the case.

The object of my invention is to provide handy and easily-operable means to expose and assist in arranging the pedals of such an instrument in operable position and automatically-operating means which may be set in operation at will for disposing and concealing them.

Here again we have a picture of the player as it appeared to Mr. Klugh, April 9, 1909, and we also have

Fig. 2.

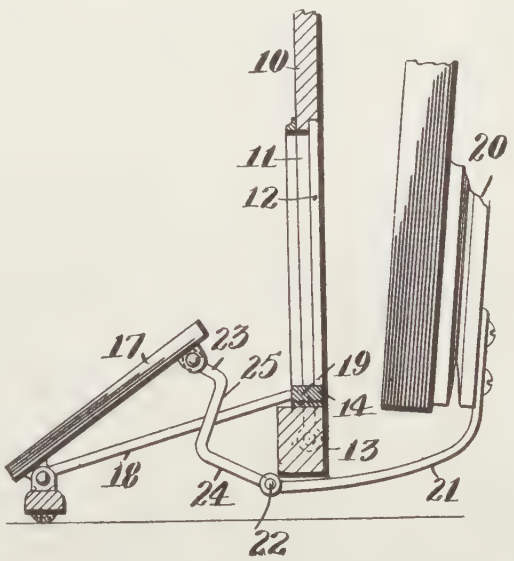

WELIN PEDAL PATENT, JANUARY 11, 1910.

what he from his standpoint and experience regards as the best remedy to meet and overcome the objection.

Description of the Peter Welin Pedal Patent

In like manner, Peter Welin took up the subject with the Patent Office on September 12, 1907. In his patent, numbered 441,954, he describes the condition of the player as it appeared to him at that time and from which description it would appear that, much as had been already done by way of improvement of the instrument, there was still room for further improvement, particularly in relation to the pedal mechanism, as witness the following from his specification:

To all whom it may concern:

Be it known that I, PETER WELIN, a citizen of the United States, residing at Worcester, in the county of Worcester and State of Massachusetts, have invented a new and

useful Pedal Mechanism for Musical Instruments, of which the following is a specification.

This application is a division of my prior application on pedal operating mechanism for musical instrument cases, filed September 12, 1907, Serial No. 392,540.

thereof when out and the connecting links between the pedals and bellows fill the notches when the pedals are folded in the casing; and to provide a construction of this character in such form that it does not weaken the lower or pedal rail or complicate or increase the cost of the instrument.

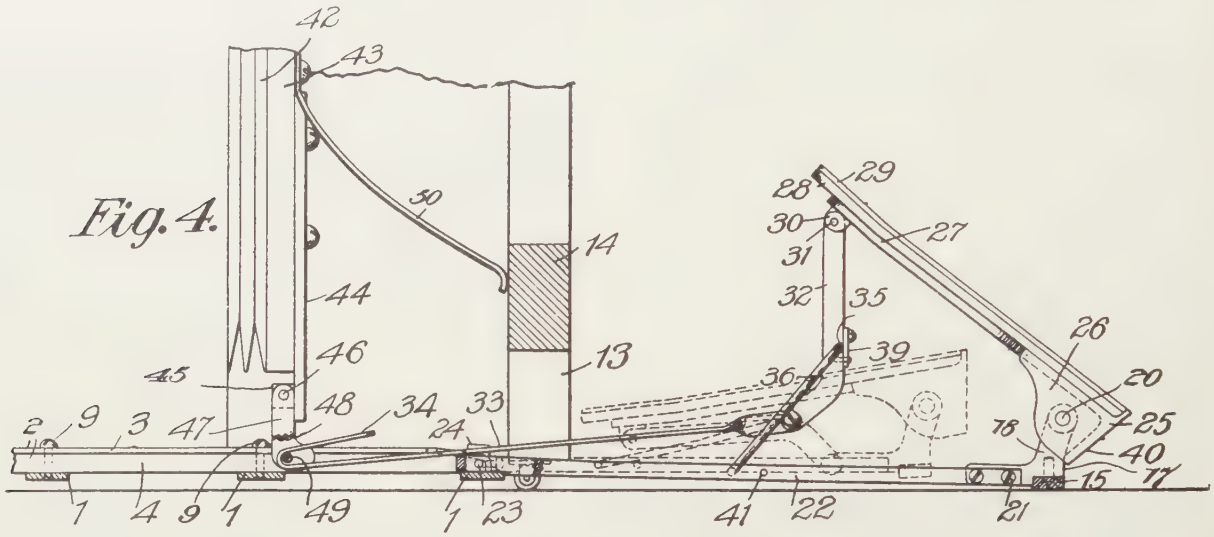

GULBRANSEN PEDAL PATENT OF OCTOBER 11, 1910.

This invention relates to pedal mechanism for musical instruments.

The principal objects of this invention are to provide a construction especially adapted for combination upright pianos, but capable of general use, that will be of such a nature that no large holes or perforations will show either when the pedals are folded in the instrument or when they are drawn out for automatic playing; to provide a construction in which this advantage is brought about chiefly by the fact that the links or arms constituting a part of the pedal connection fills the notches in the bottom rail or the molding

Further objects and advantages of the invention will appear hereinafter.

Thus, we have the opinion of three experts on the subpect; each one seems to view the problem from the same standpoint, but each one applies a different panacea and the panacea and its practical value will depend upon the practical character of the man who makes the desired improvement.

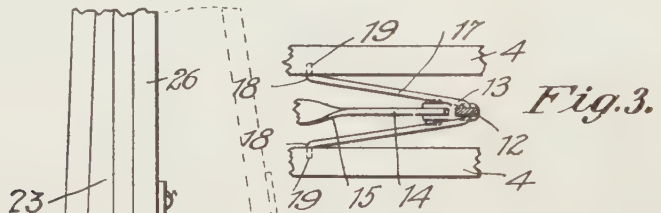

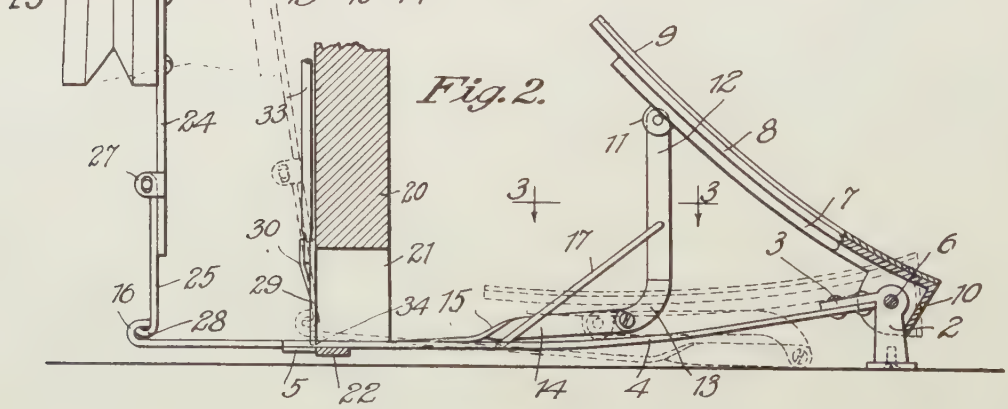

GULBRANSEN PATENT, OCTOBER 12, 1909.

TRACKING

IN the development of every great invention difficulties are bound to arise, and at times the difficulty has seemed almost insurmountable. If ever there was a mechanical problem that tried men's souls it was met in the player, when we were wrestling with the development of the modern pneumatic system, and could the latter-day player inventor take a look backward and behold the thousand and one expedients adopted and discarded before the present pneumatic action materialized, he would be amazed at the patience, perseverance and determination of the pioneers in the early days of the industry.

There were many problems difficult of solution, and, next to the pneumatic system, the shrinking of the sheet, the adjustment of the tracker and the feeding, guiding and winding mechanism, proved most distracting. What is more, while the pneumatic system has reached a state of comparative perfection, the sheet feeding and guiding mechanism remains unsettled and unsatisfactory.

Thus, three elements enter into the discussion of this problem; namely, the sheet, the rolls and the tracker. In the early history, prior to the sixty-five and eighty-eight note scale, sufficient space was allotted to each note so as to preclude the possibility of the non-tracking or non-registering of the sheet with the holes in the tracker-bar, four notes to the inch being the original scale. Subsequently we reached the sixty-five note with its scale of six to the inch.

Early Methods of Obviating Tracker Troubles

Then our tracking troubles began. Various expedients were resorted to, among the number a row of perforations extending longtitudinally through the center of the sheet and engaging a small pinned wheel, which prevented the sheet weaving from side to side as it passed over the tracker-bar. This was known as the McTammany Wheel System.

Subsequently James O'Connor took hold of the problem and undertook to guide the sheet by both electric and pneumatic means, and I have no doubt whatever but that James O'Connor was the pioneer in this department of the player development; that he was the first to conceive and practically apply the mechanism to a mechanical musical instrument and was, therefore, entitled to receive at the hands of the commissioner of patents a broad fundamental claim giving him a substantial monopoly.

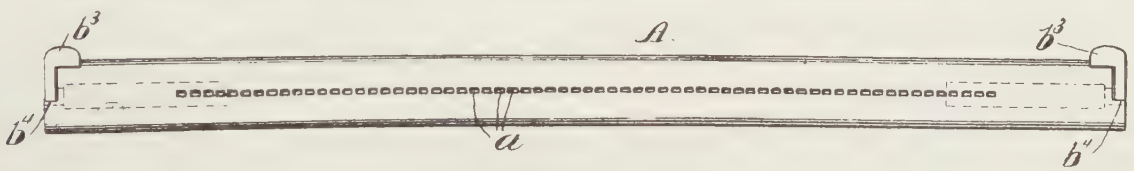

H. R. MOORE TRACKER.

Description of patent:

To all whom it may concern:

Be it known that I, HARTWELL R. MOORE, a citizen of the United States, residing at Elizabeth, in the county of Union and State of New Jersey, have invented certain new and useful Improvements in Tracker-Boards for Mechanical Musical Instruments, of which the following is a specification.

My invention relates to tracker-boards for mechanically-played musical instruments; and it has for its object to cut out at times a number of passages in the tracker-board in order that music-sheets of different widths may be used.

But while O'Connor could invent, the Patent Office could obscure, and by reason of that fact, James O'Connor sat down between two stools.

The inventor can invent; he can assemble a number of mechanical elements and combine them in such a manner as to produce a novel mechanical result. The machine is finished, it stands before him, and he fully understands its operation. But not one inventor in a hundred can tell what he has invented or describe it in such a way that the Patent Office will accept his application and issue him a patent, the prevailing opinion to the contrary notwithstanding. So O'Connor employed a patent attorney or solicitor, who examined the invention and drew up a specification with accompanying claims and drawings which were duly filed in the Patent Office. But in nine cases out of ten such documents are returned rejected, and this is what happened in the present case despite the fact that the patent solicitor was a graduate of the patent office and supposed to be expert in every thing that pertains to patent office procedure.

The Trials of James O'Connor, Inventor

But by patience, perseverance and a liberal expenditure of money, James O'Connor finally had issued to him a—what? That's it—it is called a patent, but only the Supreme Court of the United States can determine the truth of what O'Connor imagines, that he has obtained a valid patent. And he continues so minded until he is waked up by a decision of the United States District Court to the effect that the invention that cost him years of time and thousands in money is worthless and its provisions cannot be enforced or its validity sustained.

What's the remedy? A re-issue, so the solicitor is again retained and the work of rewriting the application begins. Finally it is filed and after years of patient waiting a reissue patent is granted; and now, armed with this new application, he enters the court once more and again his patent is declared worthless. A second reissue proves equally worthless.

Such is patent law under the stripes and stars in the twentieth century. How different in Germany! There they do not deal in quibbles and technicalities. The court takes into consideration what the inventor had in mind, what he had produced, and it is not a question of whether he had chosen the most appropriate language in writing his claim, or whether every word in a sentence was arranged in regular order, or every dot on an "i" or cross on a "t" properly applied, but the question there is, what did the applicant invent, and, having determined that fact, the German court makes short work of everything else, and a verdict would go to the inventor. We may not admire the German law, and they may look with suspicion on ours, yet the whole German process is more simple, direct, and fair, and I as an inventor would take my chances before a German court in preference to an American tribunal, any time.

The Nine Aperture System Brings New Difficulties

In the evolution of the eighty-eight note scale with nine instead of six apertures to the inch, it was inevitable that additional difficulty would be encountered in controlling the sheet within the narrower limits occasioned by the condensation and contraction of the scale, and this fact stimulated further invention with a view to controlling the sheet and causing it to register with the windings of the tracker bar, and an endless number of inventions and patents bearing upon the subject has been the result.

As usual, each inventor beholds the problem from a different standpoint, and each in his turn tells us what he thinks the trouble is and what the remedy that should be applied to meet and overcome the difficulty. For instance: Theodore P. Brown, after a thorough consideration of the subject, applied for and obtained Patent No. 735,062, August 4, 1903, which states as follows:

Description of Theodore Brown's Patent No. 735,062

To all whom it may concern:

Be it known that I, THEODORE P. BROWN, a citizen of the United States, residing at Worcester, in the county of Worcester and State of Massachusetts, have invented a new and useful Tracker-Board for Automatic Musical Instruments, of which the following is a specification.

This invention relates to the "tracker-boards," so termed, which are employed in automatic musical instruments—that is, this invention relates to those boards or pieces having channels co-operating with the sheets of perforated paper.

The especial object of this invention is to provide a tracker-board construction of the same general color or finish as the casings employed in musical instruments of this class and which at the same time will be provided with a light-colored central guiding-face surrounding the perforations, which light-colored face will show the registration of the perforations in the paper with the holes of the tracker-board.

To these ends this invention consists of the tracker-board as an article of manufacture, as hereinafter described, and more particularly pointed out in the claims at the end of this specification.

The accompanying drawing shows a perspective view of a tracker-board constructed according to this invention.

In the use of that class of automatic musical instruments which are controlled by perforated sheets of paper the best results can only be obtained when perfect registration is maintained between the perforations of the music-sheet and the holes in the tracker-board. In order that the registration of the music-perforations with the holes of the tracker-board may be readily observed, it is essential that the tracker-board should be of a light color, and it is on this

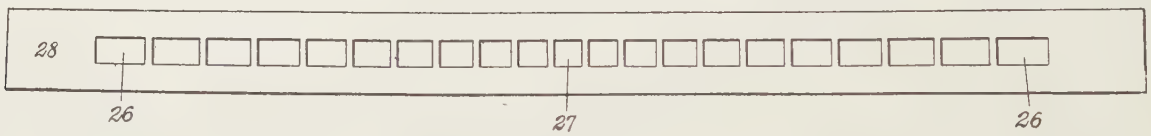

O'CONNOR PATENT No. 661,920.

Description of patent:

To all whom it may concern:

Be it known that I, JAMES O'CONNOR, a citizen of the United States of America, and a resident of the city of New York, in the county of New York and State of New York, have invented certain new and useful improvements in Self-Playing Musical Instruments and Note-Sheets Therefor, of which the following is a specification.

This invention relates to improvements in the arrangement of the actuating devices of various machines and instruments employing a controlling tally or note sheet made of material, such as paper, which is liable to expand and contract under the varying influences of changes i nthe atmosphere, the object of the invention being to compensate for these changes by expansion and contraction, so that the actuating perforations or other devices of the note or tally sheet shall register or coincide perfectly with the devices which they actuate under all atmospheric conditions. The machines to which such controlling note or tally sheets are or may be applied include voting tabulating, and registering machines and self-playing musical instruments of various kinds, the invention being herein illustrated and described in its adaptation to instruments of the latter class.

account that in substantially all the automatic musical instruments which are now manufactured the tracker-boards are made of light-colored woods. It results from this that when the casing of an automatic musical instrument is opened the light coloring of the tracker-board will necessarily present an unfinished and for many purposes unattractive appearance. On this account a demand has arisen that the tracker-boards should have substantially the same

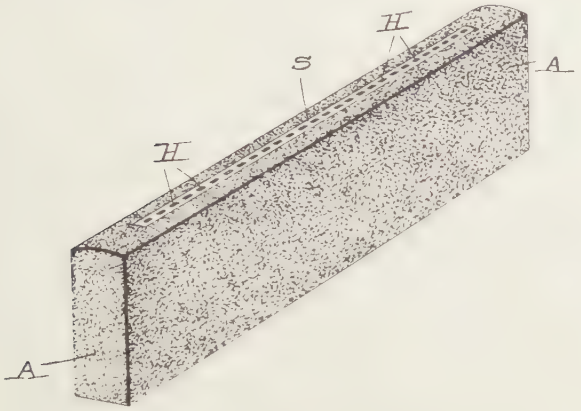

T. P. BROWN TRACKER.

finish or coloring as the casing of the instrument itself; but it has been found impossible in practice to employ dark-colored tracker-boards to produce the best results, as when the music sheet is drawn over the face of the dark-colored tracker-board it is substantially impossible to distinguish whether the perforations of the music-sheet are registering accurately with the tracker-board holes. To overcome this objection, I have found in practice that it is not essential that the entire face of the tracker-board should be light-colored in order to permit an accurate observation of the music-sheet, but that a comparatively narrow light-colored strip on the face of the tracker-board will be sufficient for showing whether the music-sheet is properly positioned or not. By taking advantage of this fact I have been enabled to provide a tracker-board the body portion or greater part of which may be of the same coloring as the casing of the instrument, while the face of the tracker-board may be provided with a comparatively narrow light-colored strip surrounding the perforations, so as to provide means for registering the music with the tracker-board holes.

In the foregoing, Brown states the difficulty and applies what he regards as the remedy, which, if it were as effective as it is simple, would have greatly simplified the situation; but the weaving of the sheet in passing over the

---

Description of patent:

To all whom it may concern:

Be it known that I, ROBERT A. GALLY, a citizen of the United States, residing at Brooklyn, in the county of Kings and State of New York, have invented new and useful Im-

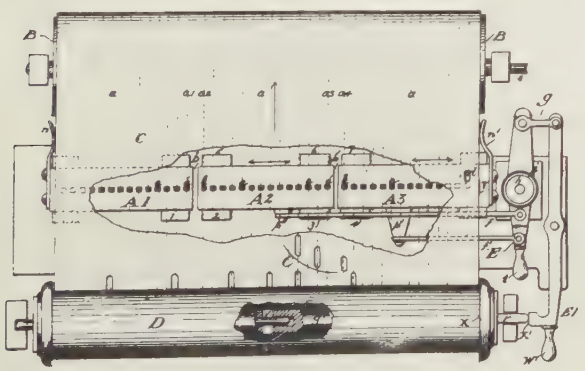

GALLY'S TRACKER.

provements in Pneumatic Trackers for Musical Instruments and Automatic Music-Sheets Therefor, of which the following is a specification.

My invention relates to the adjustable pneumatic tracker of a mechanical or automatic musical instrument and its operating music-sheet; and it consists in so constructing and arranging such apparatus as to secure ready and accurate adjustment of the tracker to a comparatively narrow music-sheet.

Description of patent:

To all whom it may concern:

Be it known that we, JOSEPH COURVILLE and FRANCIS W. DRAPER, citizens of the United States, residing at Detroit, in the county of Wayne and State of Michigan, have invented certain new and useful Improvements in Tracker-Bars for Mechanical Musical Instruments, of which the following is a specification, reference being had therein to the accompanying drawings.

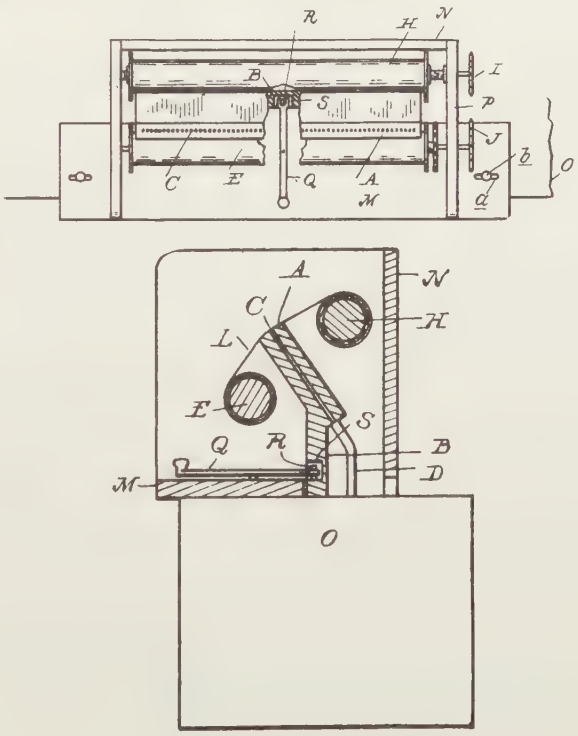

COURVILLE-DRAPER PATENT.

The invention has particular reference to pneumatically-controlled mechanical musical instruments, the sounding devices of which are operated by the movement of a traveling perforated sheet over a member generally termed a "tracker-bar" and provided with a plurality of air-ducts leading to the pneumatic devices and with which the apertures in the sheet are adapted to co-operate. In musical instruments of this character it is essential that the perforation in the sheet should at all times register accurately with the corresponding openings in the tracker-bar, and the present invention consists in a means for effecting a relative adjustment between the tracker-bar and sheet to compensate for the variations in the width of the latter occasioned by the atmospheric changes, and the novel arrangement and combination of the parts, and in certain details of construction, as will be hereinafter described and illustrated.

tracker bar and the shrink or swell of the paper, was too serious a problem to be met and overcome by so simple a remedy.

James O'Connor in his Patent No. 789,053, May 2, 1905, seems to have grasped the true magnitude of the difficulty confronting those charged with the responsibility of improving and perfecting the player, and the means employed by him were at least plausible, even if in practice, they proved impractical. The graduated scale of the tracker bar to meet the shrink and swell of the sheet, although taken up by the trade and given a fair trial, failed to meet expectations, and the system was abandoned.

In the meantime, O'Connor had got experience, which is the mother of wisdom, and in his Patent No. 789,053, May 2, 1905, for the first time he discloses a remedy in the form of a mechanism which, theoretically at least, appealed to the judgment of the skilled mechanic and inventor. All mechanisms devised for the control of the sheet in its travel from that time since have been modeled after or suggested by the O'Connor invention; but that the O'Connor automatic adjustment falls short of being a satisfactory solution of the difficulty goes without saying, and whether it can be further developed to meet the desired requirements remains to be seen. Suffice it to say that many player manufacturers decline to use it; others use it, not because they recognize its merits, but to meet the public clamor for some sort of remedy for an evil which we all recognize, but which no one so far has been able to remedy.

M. Gally, whose patent has been illustrated, also takes up the subject and applies still a different remedy.

In the illustration of the Hartwell K. Moore patent, we have shown and described one of a variety of methods that have been adopted to produce results of one kind or another by and through the tracker bar.

THE PLAYER'S WEAKNESS

NO invention ever yet emanated from the hand or brain of man that did not have some weak spot or shortcoming, even dating back to the foundation of the modern mechanical industries, to the steam engine of Watt. Ask the stationary engineer of today to point out his objection to the stationary engine and he will instantly direct your attention to its reciprocating motion.

When you propound the some problem to the locomotive engineer, he answers by pointing to the friction con-

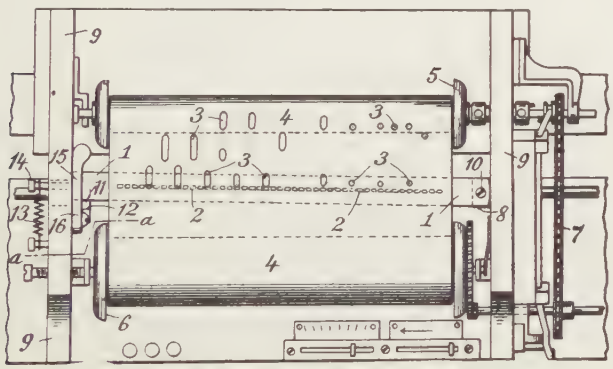

DANQUARD TRACKER PATENT.

nection between the driving wheel and the rail. Coming down to modern times and inventions, I asked the manager of a leading automobile company what constituted the weak spot in the automobile and he placed his finger on the pneumatic tire.

In 1907, the Aeolian Company, Wilcox & White and the John Wanamaker company got into a heated and acrimonious discussion regarding the player, its origin and development. The controversy raged through several issues of the MUSICAL COURIER EXTRA. The Wanamaker representative used the expression that "the Angelus was perfected first, the others were perfected afterward." Thereupon, Marc A. Blumenberg remarked that none of them was perfect, and therein he was everlastingly right.

And so I repeat that nothing absolutely perfect has ever sprung from the mind of man, not even a perfect player. The poet Gray spent an almost unbelievable period of time pruning, polishing and embellishing his immortal poem, "The Elegy in a Country Churchyard," before he gave it to the world, and even at this late day, critics are finding flaws in that great lyrical masterpiece. Claiming, therefore, as I do, the inventorship of the player, nothing that could happen under the heavens would afford me greater pleasure and consolation than to be able to point to it with the justifiable remark: "Therein lies mechanical perfection." But I cannot do it.

Faults in Function and Construction of Music Roll

Some months ago, I wrote an article on substantially the same subject, and employed the following language: "If called upon to put my finger upon the weak spot in the player, I would place it upon the perforated music roll." Of course, my remark contemplated the function as well as the construction and make-up of the roll. One of the functions, and an important one, is the feeding of the perforated sheet from one roll to the other and the devising of means so that in passing over the tracker bar, the roll shall not weave from side to side but shall follow a direct line, thus causing the longitudinal lines of perforation in the sheet to coincide with the apertures in the tracker bar.

Such is the problem before the trade today, and it does not take many words to state it, but years of effort and thousands of dollars have been spent to find a solution of the matter, and without a result that has proved satisfactory. Practically all the years of experiment and all the patents issued count for little or nothing, and now, six years after the adoption of the nine-to-the-inch scale, we

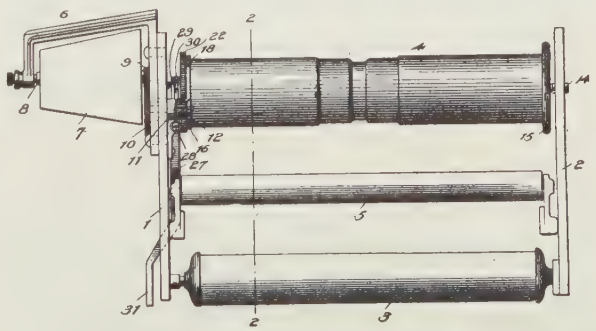

DAVIS WINDING MECHANISM.

find ourselves no further along on the road to success than we were when we started.

The character and magnitude of the difficulty confronting us having been stated, the question is: "What is the remedy?" And it is right here that we are met with a confusion of tongues and an endless variety of conflicting

opinions, as evidenced by the number and character of the patents issued up to date, dealing with the subject.

Problem Not Yet Satisfactorily Solved

The inventors have failed to solve this problem by means of adjustable or graduated tracker bars, as illustrated by patents to O'Connor, Moore, Brown and others. Notwithstanding that there was no prejudice against them, each of them having had a fair trial, the claims put forth by their respective inventions were not warranted by the results.

Desperate difficulties demand desperate remedies. What confronts the player industry of today is a desperate difficulty, and the next question is: "How are we going to meet it?" While simplicity is always to be commended and complication correspondingly deplored, yet there is no denying the fact that the O'Connor principle is the most practicable remedy yet suggested and applied to overcome the difficulty, and that notwithstanding its complication.

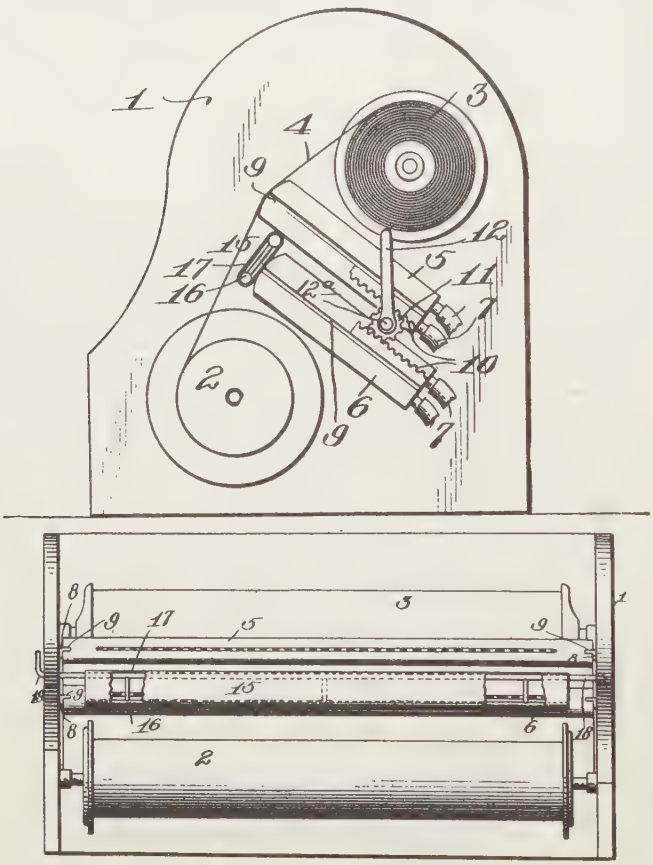

R. W. PAIN TRACKER.

But while the O'Connor principle seems to be regarded with more favor than any other method yet devised, still in its application there is a wide divergence of opinion among player manufacturers, and various attempts are being made to modify its arrangement and operation, as evidenced by patents granted to Wright, Gally, Danquard and others, a close examination of which fails to supply any remedy superior to the O'Connor plan, which is as follows:

SPECIFICATIONS OF O'CONNOR PATENT No. 789,053.

To all whom it may concern:

Be it known that I, JAMES O'CONNOR, a citizen of the United States of America, and a resident of New York, in the county and State of New York, have invented certain new and useful Improvements in Web-Guiding Devices, of which the following is a specification.

This invention relates to means for guiding a traveling sheet or web in suitable relation to or registration with the rolls, type, tracker-bar, or other devices of machinery or apparatus employing such a sheet or web, the object being to maintain the sheet or web in suitable normal operative relation to its associated devices by means of the margins of the sheet or web itself without any perforation or cutting or other special preparation of the sheet and without in any way injuring the edges of the most delicate or fragile fabric.

Complaint has been made that we do not give the entire drawings, specifications and claims in each case, but inasmuch as some patents issued from the patent office contain from ten to twenty pages of specification and an equal amount of space for drawings, while the claims reach as high as one hundred in a single patent, it must be obvious to the reader that the proposition to publish the patents entire is impractical in such a work as we have under contemplation.

Nor is it necessary for us to do more than give one or two illustrations, with the preliminary statement of the applicant describing his invention in his own language and in his own way, thus making the inventor a partner in the work of writing the history. This fact should appeal to the reader and make the work correspondingly interesting, instructive and authoritative.

Recurring to the O'Connor patent No. 789,053, it will be observed that we give the number and dates of patents cited, and by sending ten cents to the commissioner of patents, the reader can obtain a complete copy of any patent referred to.

Thomas Danquard and the Tracking Problem

There are few men connected with the industry for whose mechanical judgment I entertain a greater respect than I do for Thomas Danquard; but taking his Patent No. 791,441 and analyzing the same, I feel that it falls far short of meeting the requirements. The fate of the player industry does not depend upon the accomplishment of the things that Danquard proposes in his Patent No. 791,441; but the fate of the player is involved in the accurate feeding, tracking, guiding, winding and rewinding of the perforated music sheet; and I am unable to see how it contributes as a remedy for the evils referred to, although it has been cited as such.

SPECIFICATIONS OF DANQUARD PATENT No. 791,441.

To all whom it may concern:

Be it known that I, THOMAS DANQUARD, a citizen of the United States of America, residing at the city of New York, State of New York, have invented certain new and useful Improvements in Trackers for Mechanical Musical Instruments, of which the following is a specification.

This application is a division of my pending application for a patent for "Mechanical musical instruments," filed October 8, 1904, and having Serial No. 227,625.

The herein-described invention relates to that class of devices known as "trackers," over which travels a perforated

music sheet or plate to control operation of valve systems or parts influencing the sound-producing devices of a mechanical musical instrument, such as an autopneumatic piano-player or a self-playing piano.

The invention has for its more special object to produce "arpeggio" or broken-chord tone effects at the will of the performer, while providing for coupling the tracker to the controlled valve systems or parts by either rubber or lead tubing commonly used for making such connections. The arpeggio-tone effects are obtainable in a preferred manner by making the tracker movable to permit skewing of its lateral row of air-passages relatively to the line of approach and departure of the slots or perforations of the traveling music sheet or plate.

Another object of the invention is to facilitate quick, sharp, repetition of notes or tones when the slots or perforations of

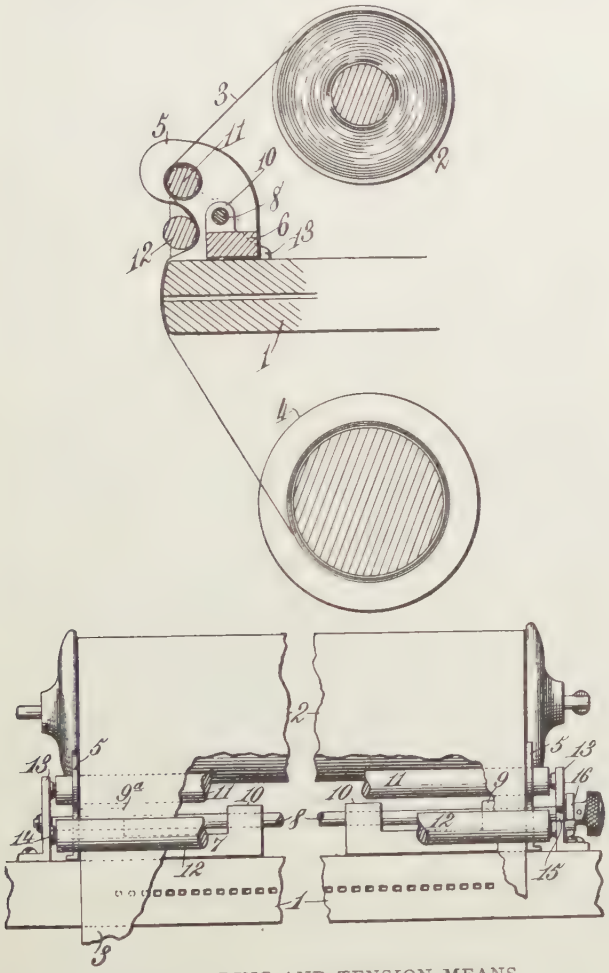

KELLY GUIDING AND TENSION MEANS.

the music sheet or plate have the preferred rounded or convexed ends which promote easy travel of the music-sheet around its delivery and take-up rolls and enhance durability of the sheet. This quick note repetition is obtained by peculiar rounded or concaved formations of the air-passages of the tracker cooperating with the rounded ends of the music-sheet slots or perforations and practically lengthening the bridges between closely-following perforations of the music sheet or plate.

Robert W. Pain and His Handling of the Crux

In the evolutionary process of passing from a scale of six to the present scale of nine to the inch, all sorts of expedients were resorted to and among the number was that of Robert W. Pain, as illustrated, shown and described in his Patent No. 779,867, which reads as follows:

SPECIFICATIONS OF ROBERT W. PAIN PATENT
No. 779,867.

To all whom it may concern:

Be it know that I, ROBERT W. PAIN, a citizen of the United States, residing at New York city, in the county of New York and State of New York, have invented new and useful improvements in Trackers for Mechanical Musical Instruments, of which the following is a specification.

This invention relates to improvements in tracker arrangements for mechanical musical instruments or musical-instrument players, and has for its object to provide a plurality of independently-usable trackers whereby, for example, music-sheets having perforations arranged on different scales to the transverse inch may be utilized in the same instrument. Music-sheets of the same width are, some of them, provided with note perforations on a scale of six to a transverse inch and others on a scale of nine to a transverse inch, requiring trackers having ducts arranged upon corresponding scales. By my invention provision is made whereby music-sheets with perforations arranged on different scales may be utilized in the same instrument.

My invention consists in the features hereinafter described and then set forth in the clauses of the claim appended to the specification.

It must be obvious to the reader that the complications inseparable from such a player construction as described by Pain must have militated against the industry, and so long as it continued the business was bound to suffer.

But the problem was up for solution, and judging from the applications being filed in the Patent Office, the minds of the entire mechanical fraternity were focused upon the tracking subject in one way or another.

George B. Kelly in Evidence on the Tracker Problem

In taking up the issue in his Patent No. 780,356, Kelly sets forth his claims as follows:

SPECIFICATIONS OF KELLY PATENT No. 780,356.

To all whom it may concern:

Be it known that I, GEORGE B. KELLY, a citizen of the United States, residing at Jamaica Plain, Boston, in the county of Suffolk and State of Massachusetts, have invented new and useful Improvements in Guiding and Tension Means for Music-Sheets, of which the following is a specification.

My invention relates to means for guiding a perforated music-sheet in its travel over a tracker-board of a mechanical musical instrument or instrument-player to secure accuracy of register of the note perforations of the sheet with the ducts of the tracker-board.

The invention has also for its object to provide means which while so guiding the perforated music-sheet will impart thereto a tension to hold the sheet in a smooth condition without wrinkles, so that said sheet in its passage over the tracker-board will sustain proper cooperative relation to the latter in all respects.

To the ends stated my invention consists in the means hereinafter described, reference being made to the accompanying drawings for purpose of illustration thereof.

That which I regard as new will be set forth in the appended clauses of claim.

It will be seen, therefore, from the foregoing, that there were other difficulties to be overcome as well as the tracking of the sheet—the discovery of means for smoothing it out and disposing of possible wrinkles, and also to apply a tension mechanism to the sheet to regulate and control

its movement. The technical men and mechanics associated with the industry were confronted with a serious situation, such a difficulty as is well calculated to "try men's souls." But it is clearly evident that some of those who were attempting to devise a remedy for the tracking evils did not fully and intelligently comprehend the magnitude of the difficulty they were contending with. O'Connor did.

Fig. 1

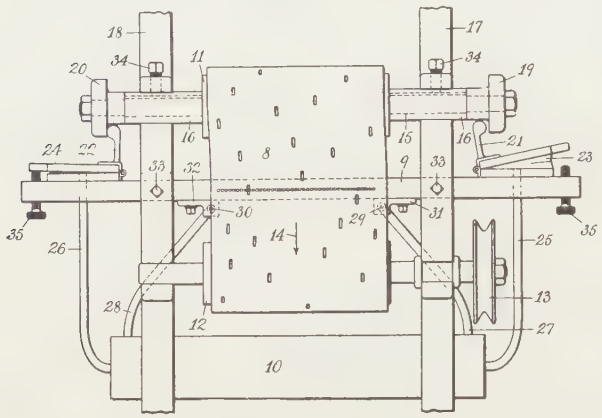

Fig. 2

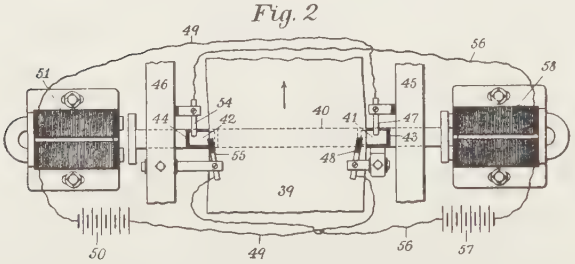

O'CONNOR WEB GUIDING DEVICE.

George Howlett Davis' Method of Building the Tracker

Another member of the craft who is well versed in player history and player imperfections is G. Howlett Davis. While his method of dealing with the subject differs from the O'Connor plan and contemplates other possibilities, yet the title of the patent is "Note Sheet Winding Mechanism" and therefore it comes within the meaning of the question under consideration:

SPECIFICATIONS OF G. H. DAVIS PATENT No. 785,799.

To all whom it may concern:

Be it known that I, GEORGE HOWLETT DAVIS, a citizen of the United States, residing at West Orange, in the county of Essex and State of New Jersey, have invented new and useful Improvements in Note-Sheet Winding and Controlling Mechanism for Musical Instruments, of which the following is a specification.

My invention has relation to new and useful improvements in note-sheet winding mechanism for musical instruments, and more particularly to winding mechanisms embodying a delivery-roll from which the sheet is transferred to a take-up roll, said sheet traversing a note selecting device arranged at a point between said rolls, and a continuously-operated driving means to rotate the take-up roll to transfer the sheet from the delivery-roll thereto.

The principal object of this invention is to provide manually-operable means under the control of the operator which will permit the stopping of the music-sheet in its travel, so that any desired note, group of notes, or chord may be held stationary in operative relation to their corresponding note-selecting device or devices in order that the sounds given off by the sounding means controlled by said note-selecting devices may be held or sustained for any desired length of period, according to the will of the person operating the instrument.

A further object the invention is to provide means under control of the operator for disconnecting the take-up roll from its driving means, so that said roll may cease its rotation and become stationary without the necessity of stopping or changing the speed of the driving means.

The invention consists in the novel construction and combination of elements embodying a take-up roll, means for driving said roll to wind the note-sheet thereon, and manually-operable means under the control of the operator for stopping the rotation of said roll without stopping the driving means.

But the idea of holding a certain chord, as in the case of the Davis patent, or the attempt to produce arpeggios by mechanical means in connection with the manipulation of the tracker bar, would seem like transferring the prerogatives of the roll to the instrument itself. The interests of the player will be best subserved by the omission of many of the "gimcracks" and mechanical accessories that today complicate its mechanism and mar its artistic appearance. The closer we adhere to the outlines of the conventional piano, and the less mechanical the player is in appearance, the better.

MORE TRACKING DEVICES

"IMITATION is the sincerest flattery." I was in a player factory the other day and was shown what they were pleased to call a new player action. The firm had been manufacturing player actions for years, but not with success. They had changed their construction frequently, but always for the worse and finally they went down and out.

Having gathered themselves together and gotten under way again, they concluded to reconstruct their player action, but instead of working along their former lines, they had practically adopted the construction of another well-known player action company, whose product stands at the very pinnacle of player actions today, and is so recognized by every man in the trade competent to judge or open to conviction.

The firm whose construction is thus being or about to be appropriated has no recourse. They hold no patent on their system, by which they can prevent others from using it, although they own and control many patents relating to players; but they have the reputation, and justly, of turning out the most simple, compact and reliable action on the market, considering the price. Nor is this the only instance where this firm's product has been appropriated by others. Of course, all this leads to standardization, and whatever tends to standardize the player action is to be commended, but it would seem to the writer that the proper thing to do in this case would have been to ask permission of the originators of the system for the right to use it; but they didn't.

A man or a firm may simplify the pneumatic action to such an extent as to reduce the cost of construction one half, but the Patent Office does not issue patents for simplicity. You may reduce the size of a pneumatic action one half, but the Patent Office does not issue patents on compactness. You may so reconstruct your action as to reduce the cost one half, but the Patent Office does not issue patents solely on the grounds of simplicity, compactness and reduced expense. Those are regarded simply as matters of degree and therefore are unpatentable. It is not fair, but it is the law.

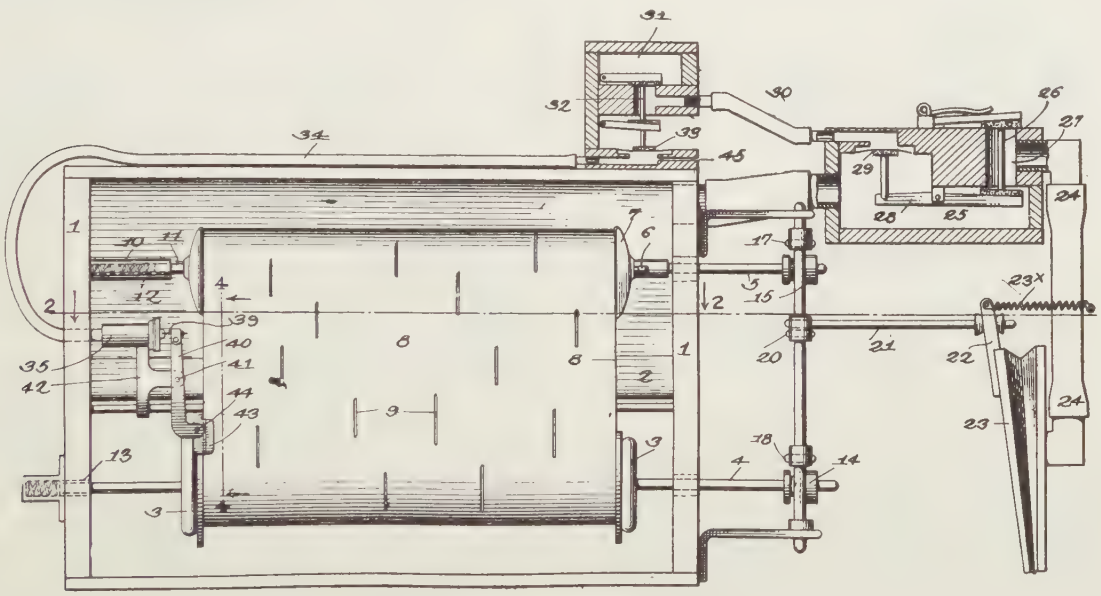

ELIHU THOMSON PATENT No. 841,356.

The O'Connor "Web Guiding Device" and the Pending Lawsuit

There is a prevailing impression among the trade that owing to the double reissue of the O'Connor patent and other reasons, the patent will not be sustained in the pend-

ing suit. While it is true on general principles that a reissue tends to weaken a patent, yet there are circumstances connected with the reissuing of this patent which are exceptional and which may, and in the opinion of the writer should, relieve this issue from the stigma that attends reissues in general.

In all the controversy that has arisen, pro and con, in regard to this subject, no one has as yet gotten up to challenge the prior inventorship of O'Connor, and I am not aware of any intention to attack the patent on that line, although the defense is a general denial.

Nor can its validity be attacked on the ground of lack of novelty, in view of the fact of its general use and the extent to which it has been imitated by other inventors

Improvements in Music-Sheet-Guiding Devices, of which the following is a specification.

My invention relates to music-sheet-guiding devices such as are used in mechanical instrument-players and mechanical players for musical instruments. Such players are ordinarily controlled by a perforated music-sheet moving over the tracker.

The object of the present invention is to guide the sheet laterally during its longitudinal movement, so as to insure the exact registration of the perforations in the sheet with the corresponding ducts in the tracker, or, more broadly speaking, to insure such relative movement of the sheet and the tracker transversely of the path of the sheet as will secure their proper alignment. It is of course obvious that any considerable lateral deviation of the music-sheet would interfere with or destroy the proper rendition of the music.

A further object of the invention is to produce this lateral movement of the sheet by apparatus which acts to

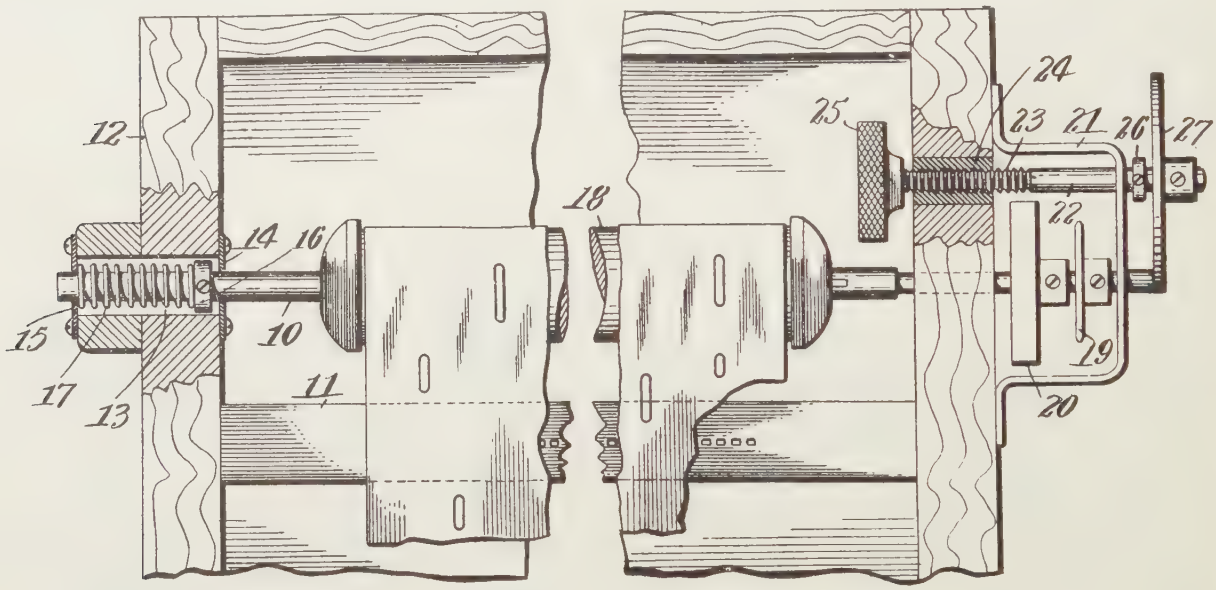

T. P. BROWN PATENT No. 862,608.

seeking a remedy for the evils which the O'Connor system was designed to overcome.

In order that the trade may realize in a measure the number and character of the attempts made to evade, or improve upon, the O'Connor plan, I herewith introduce several patents bearing upon the subject.

The Elihu Thomson system, Patent No. 841,356, January 15, 1907. The system herein shown and described, although differing in its details and construction from the O'Connor construction, yet embodies the O'Connor principle, which, broadly speaking, contemplates the regulation or automatic adjustment of the perforated sheet, by means of wind, or in other words, pneumatics.

Thomson describes his invention in the following language:

Elihu Thomson's System in Its Details

Specifications of Letters Patent:

Be it known that I, ELIHU THOMSON, a citizen of the United States, and a resident of Swampscott, county of Essex, Massachusetts, have invented certain new and useful

move the music-roll on which the sheet is originally wound and the winding-roll to which it is being wound simultaneously and equally.

Still further objects of the invention will appear in the specification and be pointed out in the claims.

Theodore P. Brown's system is described in his patent No. 862,608, August 6, 1907:

Specifications of Letters Patent:

Be it known that I, THEODORE P. BROWN, a citizen of the United States, residing at Worcester, in the county of Worcester and State of Massachusetts, have invented a new and useful Music-Sheet Mechanism, of which the following is a specification.

This invention relates to an adjusting device for music rolls used on piano players and automatic pianos.

The principal objects of the invention are to provide a convenient and simple means for accomplishing this result embodied in such a form that the adjusting devices can consist of only a few elements and can be located in such a position as to occupy very little space.

Further objects and advantages of the invention will appear hereinafter.

Reference is to be had to the accompanying drawing which illustrates a preferred embodiment of the invention and which shows the same in plan with parts in section.

We also submit herewith several systems designed to

overcome recognized defects and objections to the player while in the evolutionary stage.

Other Attempted Solutions of the Tracker Bar Difficulties

The Henry Price Ball System, as illustrated and described in his patent No. 837,910, December 11, 1906:

Specifications of Letters Patent:

Be it known that I, HENRY PRICE BALL, a citizen of the United States, residing at New York city, county and State of New York, have invented certain new and useful Improvements in Tracker-Boards for Mechanical Musical Instruments, of which the following is a specification.

Mechanical musical instruments of the pianola class employ tracker-boards of different widths. This involves the employment of a music-sheet having a width corresponding to that of the tracker-board with which it is to be used. This condition is objectionable in that all musical compositions are not produced in rolls of different widths, and consequently it may happen that a particular composition cannot be obtained of the desired width.

To overcome the objections stated, I have devised a removable and adjustable tracker-board of definite width, which may be applied to the fixed tracker-board of any instrument, the object of my invention being to provide means

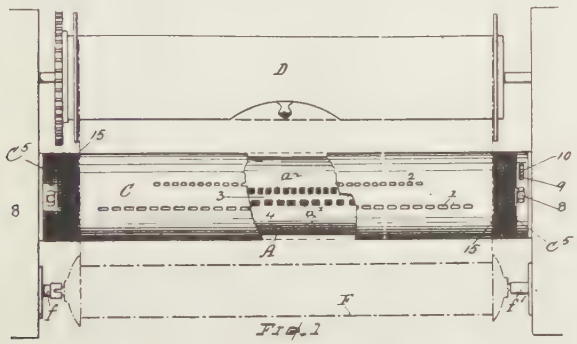

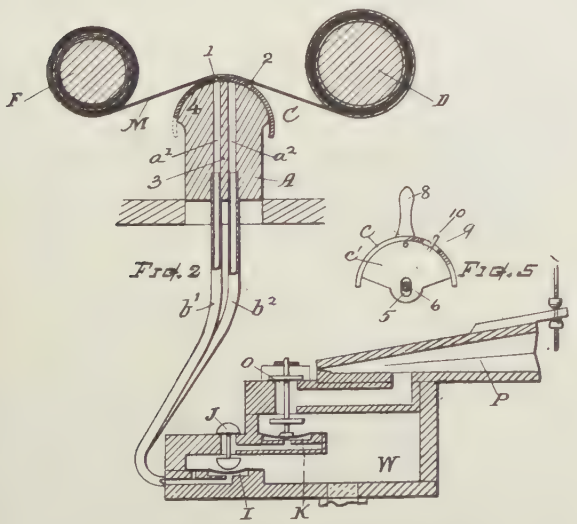

FRANK C. WHITE TRACKER No. 825,629.

whereby music-sheets of a given width can be used on any mechanical musical instrument.

The accompanying drawings will serve to illustrate my invention.

The Frank C. White System, as shown and described in Patent No. 825,629, July 10, 1906.

Specifications of Letters Patent:

Be it known that I, FRANK C. WHITE, a citizen of the United States, residing at Meriden, in the county of New Haven and State of Connecticut, have invented a new and useful Improvement in Trackers for Automatic Musical Instruments, of which the following is a specification, reference being made therein to the accompanying drawings.

The object of my present invention is to provide a tracker with a plurally-orificed semicylindrical face member ad-

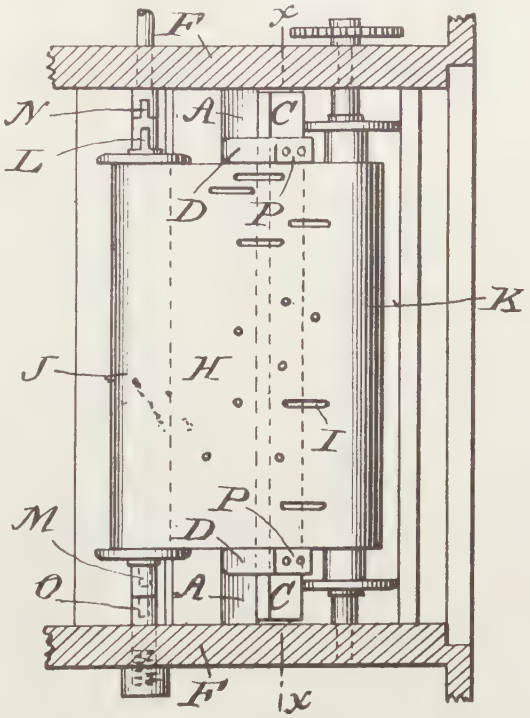

H. P. BALL PATENT No. 837,910.

justable in the manner set forth for opening or closing either series of ducts; also, to provide a simple, efficient, and convenient tracker having the improved construction and features of novelty substantially such as hereinafter particularly explained, and definitely expressed in the claims, a practical form of the mechanism being illustrated in the drawings, wherein—

Figure 1 represents a plan view of a tracker mechanism embodying my invention, a portion being shown broken away to reveal parts beneath. Fig. 2 is a transverse vertical section of the same, together with pneumatic mechanism controlled therefrom.

The George P. Brand System, as illustrated and claimed in his patent No. 835,776, November 13, 1906.

Specifications of Letters Patent:

Be it known that I, GEORGE P. BRAND, a citizen of the United States, residing in the city of New York, borough of Manhattan, county and State of New York, have invented certain new and useful Improvements in Tracker Bars for Pneumatic Players for Musical Instruments, of which the following is a specification.

My improvements relate to what are known as "bridges" or "tracker-bars" in pneumatic apparatus, such as piano

and other musical instrument players, in which a perforated tune-sheet is employed.

The object of my invention is to attain a tracker-bar in which the adjoining tone-holes are as close to each other

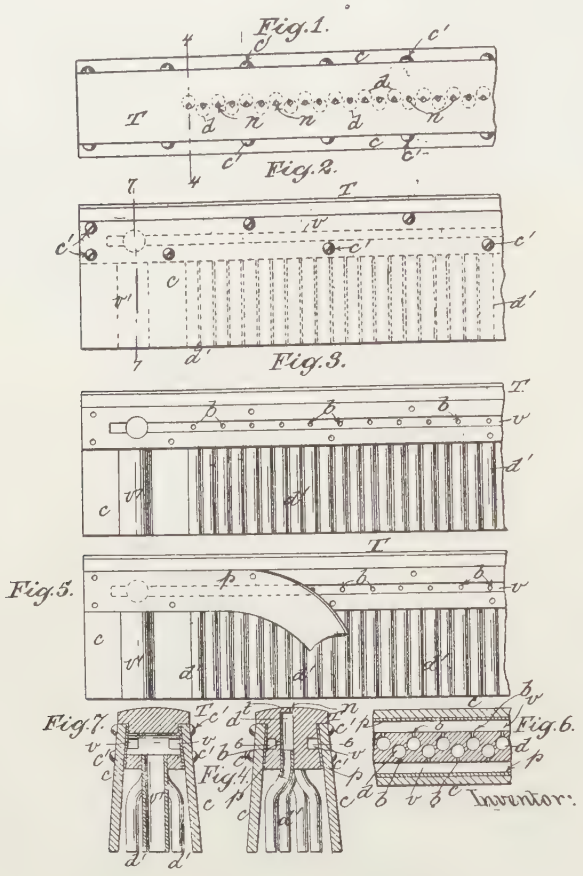

GEORGE P. BRAND TRACKER-BAR.

as it is practicable to make them, so that a comparatively narrow music-sheet may be used. The invention consists in the construction herein described and claimed specifically.

The Harold Binney system, as described in his patent No. 873,981, December 17, 1907:

Specifications of Letters Patent:

Be it known that I, HAROLD BINNEY, residence 10 Lexington avenue, New York city, (post-office address, 141 Broadway, New York city, New York,) have invented certain new and useful Improvements in Tracker-Boards for Legato and other Effects in Pneumatic Musical Apparatus, of which the following is a specification.

Some years ago it was discovered that by overlapping the perforations of successive notes of a musical composition in the perforated music rolls used for pianolas and

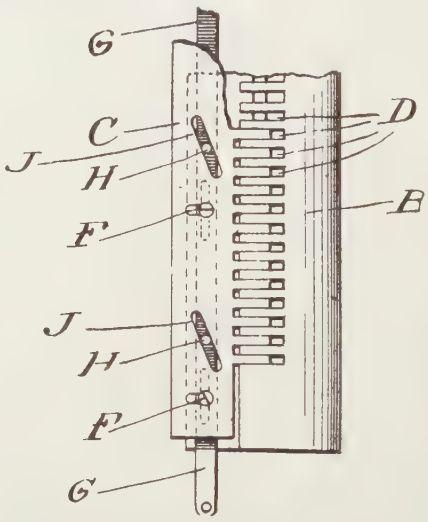

BINNEY TRACKER FOR LEGATO.

other instruments a smoothness of sound and legato effect resembling hand-playing could be produced.

The object of the present invention is to get a similar result so far as possible without the use of overlapped perforations. To accomplish this I prolong each of the tracker holes in the direction of the motion of the sheet and provide means for adjusting or varying the length of opening of such tracker holes.

These patents are severally worthy of careful study, as they were the results of thought on the part of their inventors.

MELVILLE CLARK, A PIONEER

THE development of the player advanced by stages. While all the fundamental principles and essential elements of the modern player were embodied in the McTammany player of 1876, just as all the essential elements of the modern grand manual piano were embodied in the Cristofori piano of 1709, yet it took over a hundred years' application of the skilled artisans and inventors of Europe

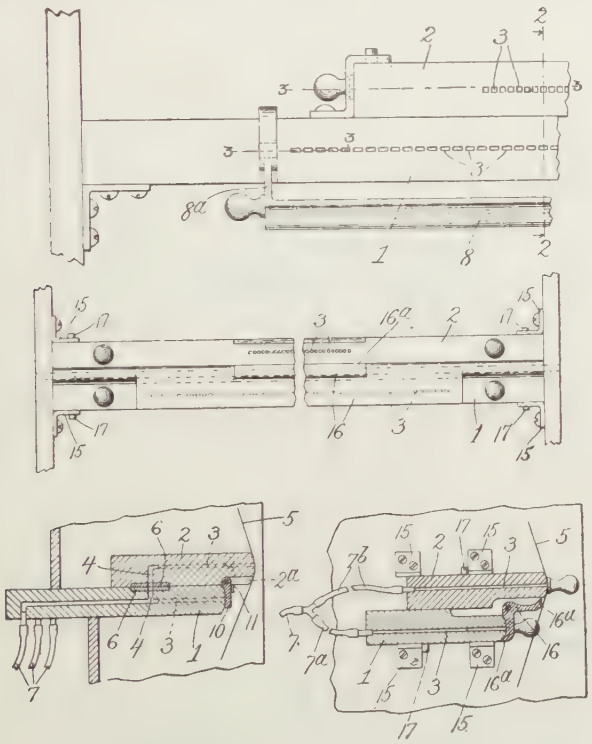

MELVILLE CLARK PATENT NO. 921,590

and America to improve and perfect the Cristofori instrument. In like manner, it has taken the concentrated mechanical genius of Europe and America thirty-six years to develop and improve the player mechanism and bring it up to its present state of perfection, and the end is not yet. I have said that Melville Clark was a pioneer, for while it is true that he did not enter the lists until 1887, yet even then the player was struggling for an existence. A battle had to be fought between its friends and foes, and a victory won, and Clark helped to win that victory. I have already referred to Clark's achievements in another department of this work.

The present chapter deals with the subject of the eighty-eight scale only, which scale was first embodied in a working instrument by Clark, as early as the month of January, 1901.

While the player was the first mechanical instrument developed, yet it was not the first to be put upon the market. The opposition to its introduction was too powerful, so we had to adopt the policy of pursuing the lines of least resistance. Therefore we began manufacturing what the musical profession regarded as toys and "trumpettos" with eight notes, and the "organettes" with fourteen. From fourteen, we jumped to twenty, from twenty to twenty-four, from twenty-four to thirty-one, and then to forty-four, forty-eight, and finally to fifty-eight, at which point the trade thought that we had reached the high water mark. For three years fifty-eight seemed to settle the issue, but just in the midst of the fifty-eight discussion, the advent of sixty-five notes was proclaimed.

Extension of the Scale and Its Import to the Makers

During the time when less than a dozen manufacturers were engaged in the manufacture of the player, an extension of the scale had little effect upon the trade in general; but now that there were between thirty and forty engaged in the business, any change in the scale involved a corresponding change in the machinery, tools and patterns of the manufacturer, and such a condition of affairs was bound to concern them seriously and cause them to regard with anxiety any further extension of the scale.

The player had been obstructed and held back for years, notwithstanding the fact that the public was willing to invest in it. But that being the case, no power on earth could restrain it. It had reached the stage where it was regarded as a profitable, commercial proposition, and nothing could stay its onward progress.

As the extension of the scale was in the nature of progress, it follows that the shift from the fifty-eight to the sixty-five note scale came to pass, and the player trade settled down to the exploitation of the sixty-five note scale, never dreaming that anyone in the trade would have the audacity to spring an eighty-eight note player upon the market.

But it is the unexpected that happens in this world, and the player manufacturers had hardly gotten under way with the sixty-five note player when it was rumored that Melville Clark had increased the scale to eighty-eight notes and that he would place upon the market an instrument embodying this scale. The trade attached little importance

to the announcement of Melville Clark, and continued to pursue the even tenor of its way.

Marc A. Blumenberg and the Eighty-eight Note Player

But Marc A. Blumenberg saw the Clark eighty-eight note player and approved it, and said so with emphasis in the

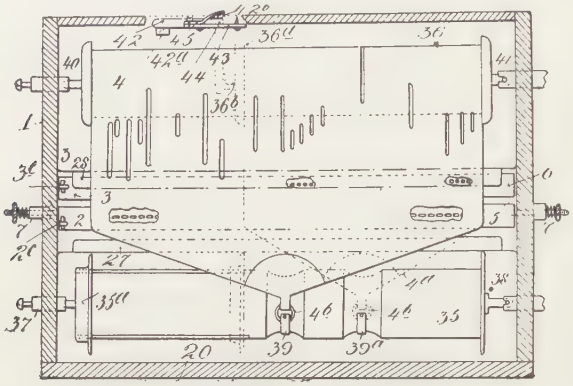

MAIER TRACKER

Musical Courier Extra. A heated discussion arose over the subject and a spirit of opposition and resistance was developed against the eighty-eight note player. So it came to be Blumenberg and Clark against the field, and Blumenberg and Clark won and the player industry had to bow to the inevitable.

Personally, the writer was opposed to the change at the time, knowing the loss that would be entailed by those who had so recently embarked in the manufacture of the sixty-

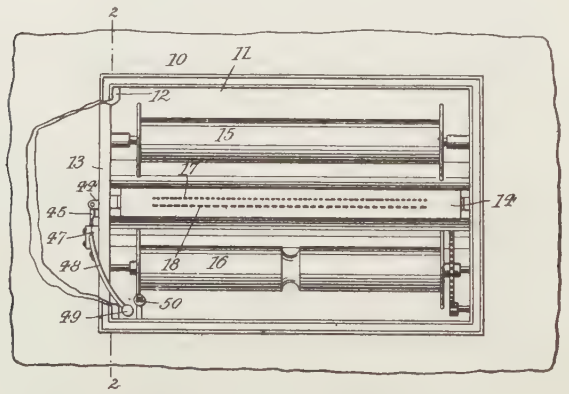

WIESER DUPLEX TRACKER BAR

five note player. And furthermore, many improvements were being developed, and these could be made more cheaply and effectively on the sixty-five than on the eighty-eight player.

But the player had gotten under way and was going on conquering and to conquer, and if eighty-eight notes represented player progress, the people were bound to have it, so I, with the others, had to put my pride in my pocket and recognize the supremacy of the eighty-eight note player. Of course, the victory of the eighty-eight note player proved a great boon for Clark, although it came near ruining many others who had just embarked in the manufacture of the sixty-five note instrument.

Now, in view of the struggle Clark had made to win recognition for his eighty-eight note player, it may seem strange to think that his title to the development of the same should have been challenged. It was, nevertheless, and there are those in the trade today who do not hesitate to challenge his title as the father of the eighty-eight note player. But the writer does not in the least doubt his right to the honor.

Eighty-eight Notes Brought Trials in Their Wake

The introduction of the eighty-eight notes brought upon the player trade a whole train of trials and tribulations. The two instruments had to be amalgamated, and this proved a mighty task and led to endless complication, reconstruction and rearrangement of parts, so that for a period of years, in fact until the sixty-five note proposition was entirely eliminated, "confusion worse confounded" reigned in the player industry.

It would take a good-sized book to chronicle all the difficulties encountered by the player manufacturers during the transition from the sixty-five note player to the eighty-eight note. For instance, they had to so arrange and construct the instrument as to enable it to play either sixty-five or eighty-eight note music. That required the introduction of an additional tracker bar, or two tracker bars instead of one for each instrument, and everything else in proportion.

In order to indicate how this feat was effected, I herewith submit the patents of Melville Clark, Frank C. White and others, all bearing upon the same subject, illustrating and describing the various agencies and instrumentalities employed by the several mechanics and inventors in their efforts to temporarily meet and overcome a serious difficulty.

But there can be no question but the introduction of the eighty-eight note represents an epoch in the history of the player and the introduction of the instrument represented the high water mark in the player industry, at least as far as the scale is concerned.

SPECIFICATIONS OF MAIER PATENT.

Be it known that I, Louis H. Maier, a citizen of the United States, residing in New York city, borough of Manhattan, New York, have invented certain new and useful Improvements in Trackers or Bridges for Self-Playing Musical Instruments, of which the following is a specification.

In self-playing musical instruments, as known to me, the perforated music sheets for one make of instrument sometimes vary in width from the music sheets adapted for a different make of musical instrument, so that the music sheets for a given instrument will not operate properly with some other make of instrument, and it is the object of my invention to provide means to enable music sheets of different widths, or having different arrangements of perforations or holes, to be used in a given self playing musical instrument or mechanical player.

In carrying out my invention, I provide a plurality of movable or adjustable trackers or bridges, having different arrangements of tracker holes or orifices, whereby a music sheet that is perforated for a given note compass of an action may be used with one of the trackers and a music sheet that is perforated for a different note compass may be used with the other tracker, and whereby also such trackers may be utilized in connection with perforated music sheets that may vary in width.

A further object of the invention is to provide an improved arrangement of connection between the pneumatic operating

devices of a self-playing musical instrument or mechanical player and the different series of holes or orifices of the trackers, whereby one series of such holes may be connected with the secondary pneumatics for a certain character of perforated music sheet and the associate primary pneumatics

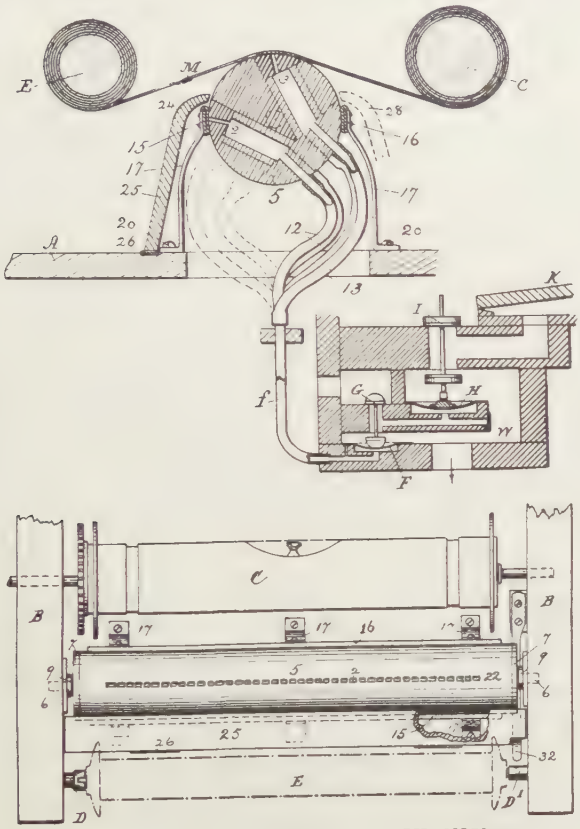

WHITE AND HAYWOOD MECHANISM

may be connected with a different series of tracker holes or orifices.

The invention also comprises the novel details of improvement and arrangement of parts that will be more fully hereinafter set forth and then pointed out in the claims.

SPECIFICATIONS OF CLARK PATENT NO. 921,639.

Be it known that I, Melville Clark, a citizen of the United States, residing at Chicago, in the county of Cook and State of Illinois, have invented new and useful Improvements in Duplex Tracker Boards for Automatic Musical Instruments, of which the following is a specification, reference being had to the drawings forming a part thereof.

The purpose of this invention is to provide an improved construction of tracker board and connections of the ducts thereof for the purpose of adapting the instrument provided with such tracker board, when suitably constructed in other respects, to be operated for any one of the following purposes by the different forms of controllers specified, to wit: 1. For playing within a limited range, say 58 notes, by means of a single set of playing devices of that number when controlled by a 58-note traveling sheet. 2. For playing in a similar manner a greater range, say 65 notes, when controlled by a 65-note sheet. 3. For playing in a similar manner a maximum range of, say 88 notes, when controlled by an 88-note sheet, each of the three controller sheets thus far mentioned being cut to the same scale hereinafter referred to as the "wider" scale. 4. For playing up to the maximum range of 88 notes when controlled by an 88-note sheet cut to a narrower scale. 5. For playing up to any desired range, as 70 notes, with one set of playing devices playing, for example, an accompaniment, and simultaneously playing, by an independent set of playing devices, a solo or melody within a range of notes for which apertures in the tracker board on the narrower scale can be provided in addition to the 70 first mentioned on such narrower scale within the total length of tracker board required for 88 notes of the wider scale.

Assuming, for example, a so called wider scale on the basis of one-sixth inch for each note, making, for 88 notes, a total length from center to center of the extreme apertures of 14¼ inches, there will be room within the same length for a parallel set of tracker mouths on a scale of, say ⅛ inch, for 116 notes of which 70 apertures at the middle part may be employed for accompaniment and the remaining 46—23 at each end—for solo or melody playing. It will be evident that the scope of the invention is not limited to any particular number of notes, or tracker ducts for the same, in the several groups. Perforated controlling sheets are now commonly cut for 58 notes, for 65 notes and for 88 notes, and it is also common to cut upon a narrower scale 88 notes in the width

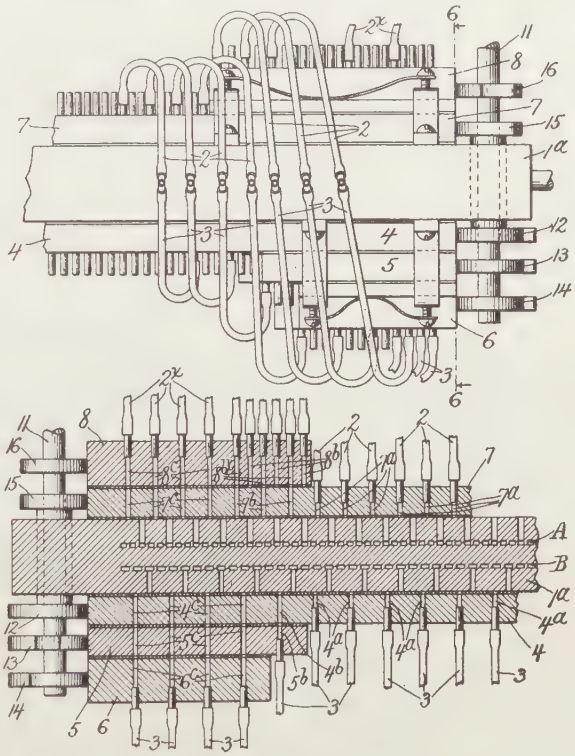

ANOTHER VIEW OF CLARK PATENT No. 921,639.

of paper required for 65 notes of the wider scale, and the numbers used in the above statement and hereinafter in this specification are to be understood as representing any convenient groups which the conventional or standard manufacture of automatic instruments may require.

The invention consists in the features of construction hereinafter described and illustrated in the drawings as indicated in the claims.

SPECIFICATIONS OF CLARK PATENT NO. 921,599.

Be it known that I, Melville Clark, a citizen of the United States, residing at Chicago, in the county of Cook and State of Illinois, have invented new and useful Improvements in Duplex Tracker-Boards for Automatic Musical Instruments or Players, of which the following is a specification, reference being had to the accompanying drawings, forming a part thereof.

This application is a division of my application Serial No. 357,318, filed February 14, 1907, now pending in the United States Patent Office, its purpose being to claim certain modifications of the generic invention shown in that application which differ specifically from others that are specifically claimed therein.

The purpose of this invention is to provide a construction of tracker devices for musical instruments or players by which such instruments may be adapted to employ controlling sheets having their perforations cut according to different scales.

The tracker device comprises two elements, each of which may be termed a tracker duct-board. The tracker duct-board, 1, has the mouths of the ducts, 3, spaced according to a scale different from that of the tracker duct-board, 2, The first may be understood as indicating, for example, a spacing of one-sixth of an inch between centers of consecutive ducts, and the second may be understood as having that space one-tenth of an inch. In both tracker-boards, at a distance back from the edge having the duct mouths, the ducts, 3, are equally spaced, and at this point both tracker duct-boards are provided with ports, 4, leading from their respective ports to the proximate surfaces of the two boards.

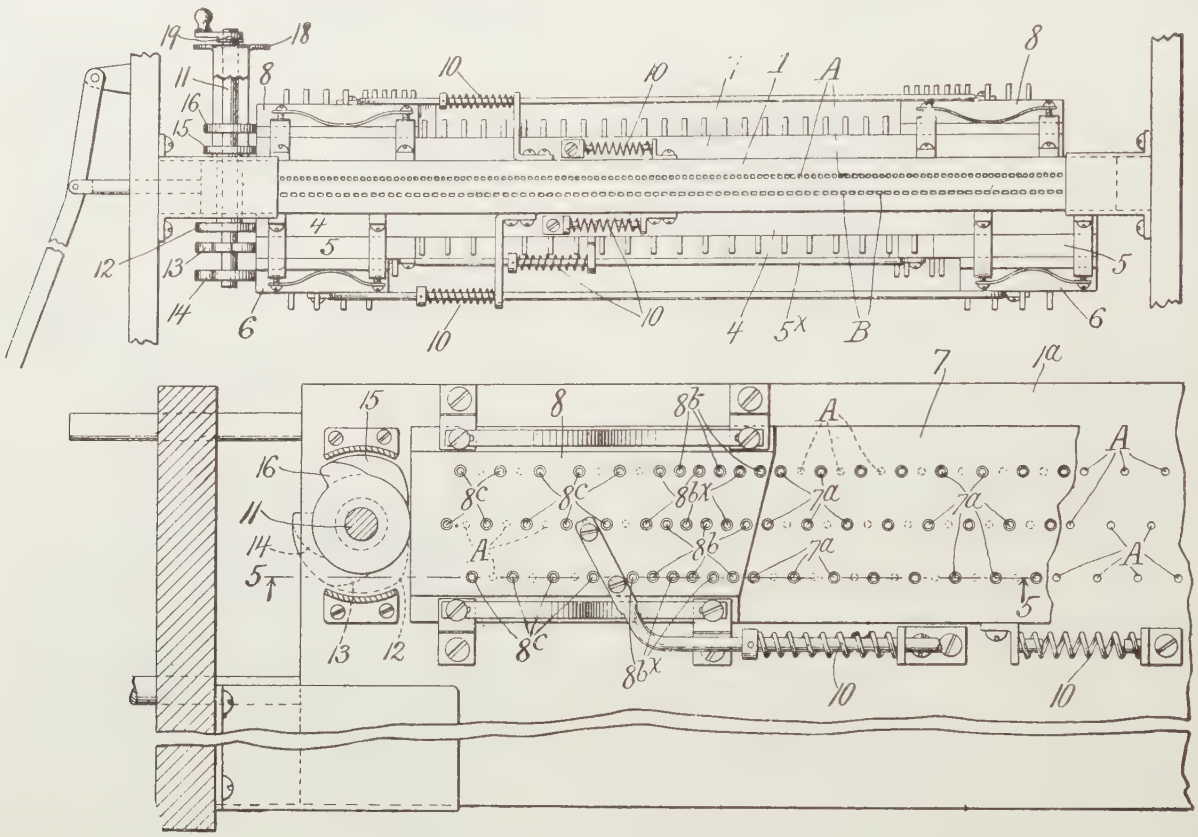

MELVILLE CLARK PATENT NO. 921,639

SPECIFICATIONS OF WIESER PATENT.

Be it known that I, Joseph Wieser, a citizen of the United States, residing at St. Johnsville, Montgomery county, State of New York, have invented new and useful Improvements in Duplex Tracker-Bars for Pneumatic Musical Instruments, of which the following is a specification.

The standard tune sheets adapted to cooperate with the tracker bars of pneumatic musical instruments are of different compass and are generally provided with either 65 or 88 longitudinal rows of perforations, so as to actuate either 65 or 88 piano hammers. The perforations of both kinds of tune sheets, however, occupy the same width, so that in tune sheets adapted to actuate 65 hammers, the perforations are comparatively wider than in those adapted to actuate 88 hammers.

In order to permit the use of both kinds of tune sheets on one and the same piano or piano player, I provide a tracker bar which has two parallel rows of air openings, one row containing 65 openings, while the other row contains 88 openings. The openings of either one row are adapted to be coupled to the music producing means, the connection being such that when one row communicates with said means, the other row is cut off therefrom. For this purpose a perforated slide is employed which controls the opening and is within reach of the person operating the piano, so that the instrument may be readily adapted to the use of tune sheets having a different compass.

SPECIFICATIONS OF FRANK C. WHITE PATENT.

Be it known that we, Frank C. White and George W. Haywood, citizens of the United States, residing at Meriden, in the county of New Haven and State of Connecticut, have invented a new and useful Tracker Mechanism for Automatic Music-Playing Instruments, of which the following is a specification, reference being made therein to the accompanying drawings.

The object of our present invention is to provide a construction for dual scale trackers that shall be simple, economical, and practical for manufacture, efficient and desirable for use, and convenient for adjustment and care by the operator.

Our invention consists in a tracker mechanism embodying the peculiar features and novel construction of parts, and combination of parts illustrated in the drawings and explained in the following detailed description, the particular subject-matter claimed being definitely set forth in the summary.

Our improved tracker mechanism is applicable for use in various styles of automatic piano-players, automatic combination pianos, self-playing organs, and similar auto-pneumatic music-playing instruments in which a perforated music-sheet is employed for governing the action of pneumatically-operated mechanisms. Such instruments being in their general structure well known, the present description will be understood by simple reference to such parts thereof as have intimate relation to the invention shown in the accompanying drawings.

FEEDING, GUIDING AND WINDING

IF the antiquarian of the future should in his excavations come upon the linotype or monotype systems of printing, he would never dream that the two systems were designed for the same purpose, so dissimilar in form, design, operation and construction are they.

Mergenthaler and Lansing were familiar with the hand method of setting and justifying type, but when they set

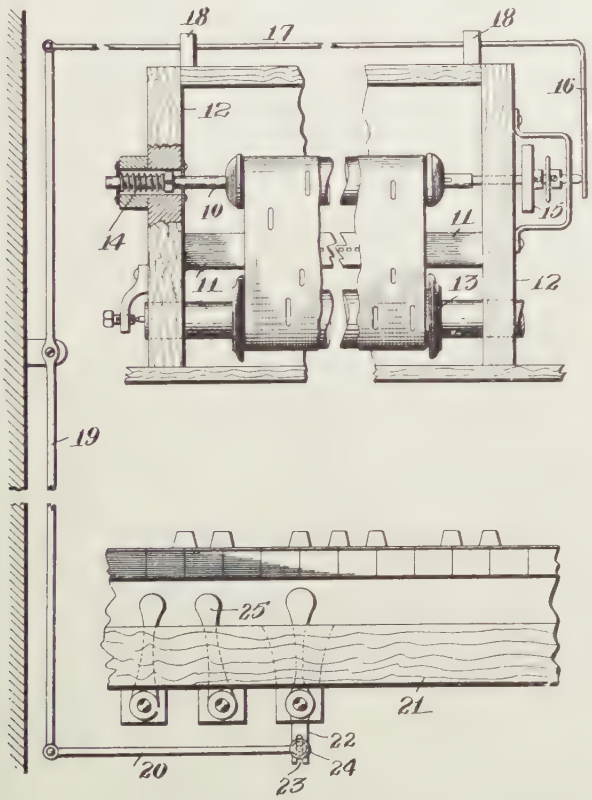

BROWN PATENT NO. 912,068.

to work to devise machinery to produce this result, how different the mechanism and operation of the two systems! Which goes to show that men may view things from the same or different standpoints and arrive at entirely different conclusions.

So it has been with the player inventors, especially in dealing with the problem of feeding, guiding and winding the perforated sheets. Taking the O'Connor patent No. 841,356, owned by the Autopiano Company, as an illustration, and contrasting it with the Brown patent No. 500,648, how different are the agencies and instrumentalities employed to effect the same result! And the patents covering the aforementioned feature are now numbered by the hundreds, to say nothing of pending applications. But recent litigation has directed special attention to the subject of paper feeding and guiding, and this is bound to result in an extra crop of patent applications bearing upon the matter.

The writer has been shown a model for a feeding and winding mechanism invented by a gentleman from the West which is totally different from anything suggested or invented heretofore in relation to the subject. If it

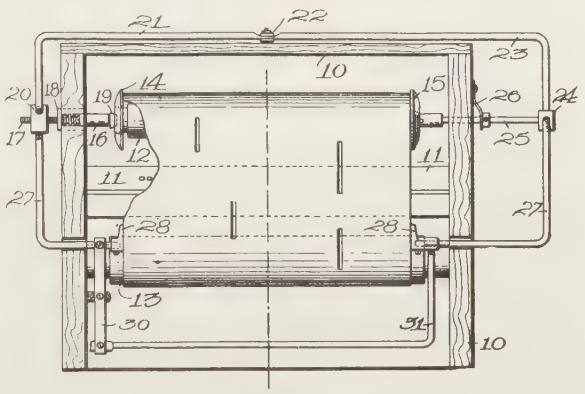

BROWN PATENT NO. 942,956.

works out in practice, it will excel in simplicity, directness and inexpensiveness over anything yet devised.

SPECIFICATIONS OF BROWN PATENT NO. 912,068.

Be it known that I, Theodore P. Brown, a citizen of the United States, residing at Worcester, in the county of Worcester and State of Massachusetts, have invented a new and useful Music-Sheet-Controlling Device, of which the following is a specification.

This invention relates to an adjusting device for music rolls used on piano players, automatic or combination pianos and similar musical instruments.

As is well known the note sheets used on instruments of this character contract and expand according to the weather, and it is necessary to make adjustments to assure the tracking of the sheets. This is sometimes done by moving the music spool longitudinally.

The principal object of this invention is to provide convenient and simple means for moving the music spool back and forth, which can be manipulated from the front of the key-

bed so that the position of the music spool will at all times be under the direct and convenient control of the operator's hand which is used for manipulating the several levers located along the key bed.

SPECIFICATIONS OF BROWN PATENT NO. 942,956.

Be it known that I, Theodore P. Brown, a citizen of the United States, residing at Worcester, in the county of Worcester and State of Massachusetts, have invented a new and useful Mechanism for Guiding Music-Sheets, of which the following is a specification.

This invention relates to that class of musical instruments in which the note sheet passes over a tracker.

The principal objects of this invention are to provide an exceedingly simple and inexpensive mechanism for keeping the music-sheet central with respect to the tracker, in which the parts are so constructed and arranged as to be capable of the necessary adjustments and yet be inexpensive to manufacture, and have a few parts that are likely to get out of order in use; also to provide means whereby the expansion and contraction of the sheet in width will automatically move both flanges of the spool equal distances in opposite directions so that the sheet will always remain central with respect to the tracker; and improved means whereby the sheet will also be kept exactly central as it is wound on the take-up spool, the variation in the width of the sheet itself being utilized for the purpose of automatically holding it in central position.

THE TRACKER BAR

TO one who has looked into the tracker bar question in the manner employed by the writer, it is amazing to think of the number of patents that have been issued or applied for covering this single element alone, yet the ingenuity of the inventors and manufacturers of players has been such that this single element or part has been divided, subdivided, readjusted, reconstructed and presented in hundreds of forms and arrangements, well calculated to puzzle and confuse the student bent upon a systematic solution of the subject. I think that a casual examination of the Clark and Maerten patents will illustrate the point I am trying to make, and although an examination of the various tracker and double tracker patents would seem to indicate that the player inventors had boxed the compass on the subject, yet the end is not yet and patents bearing upon the subject are continually being applied for.

It was the double tracker bar problem that did most to complicate and obstruct the progress of the player, but now that the sixty-five note difficulty has been disposed of, the tendency is toward an even greater simplicity of construction and operation than prevailed prior to the adoption of the double tracker bar, and anything that tends to simplicity is to be commended. This statement applies not only to tracker bars but to every other part of the instrument as well.

Unfortunately, it was impracticable to separate the tracker bar from certain other elements and treat the subject under a special heading, but as a matter of fact the tracker bar, music rolls and guiding mechanism entered into combination so often that it was found difficult to separate them and treat each element separately, nor was it found practicable to describe or refer to each and all of the patented devices, but simply to illustrate and describe a sufficient number to show in a general way the actual state of the art.

SPECIFICATIONS OF MAERTEN PATENT.

Be it known that I, Christian Maerten, Jr., a citizen of the United States, residing at North Tonawanda, in the county of Niagara and State of New York, have invented a new and useful Improvement in Tracker-Boards for Musical Instruments, of which the following is a specification.

This invention relates to tracker-boards for mechanical musical instruments of that type in which the speaking or sound producing devices are operated by a pneumatic action or mechanism controlled by a perforated note sheet which travels over the tracker-board for opening and closing the air ducts or passages therein. Some of these instruments have a large number of speaking devices, and, as there must be a correspondingly large number of ducts in the tracker-board, it is desirable to have the ends of the ducts which register with perforations of the music sheet, and which are arranged in a single row, close together in order to permit of the use of a relatively narrow note sheet. A narrow note sheet is preferable to a wide one, because, among other reasons, it is easier to properly guide it and insure a perfect registration of its perforations with the ducts of the tracker, and a narrow sheet is less liable to be injured or changed

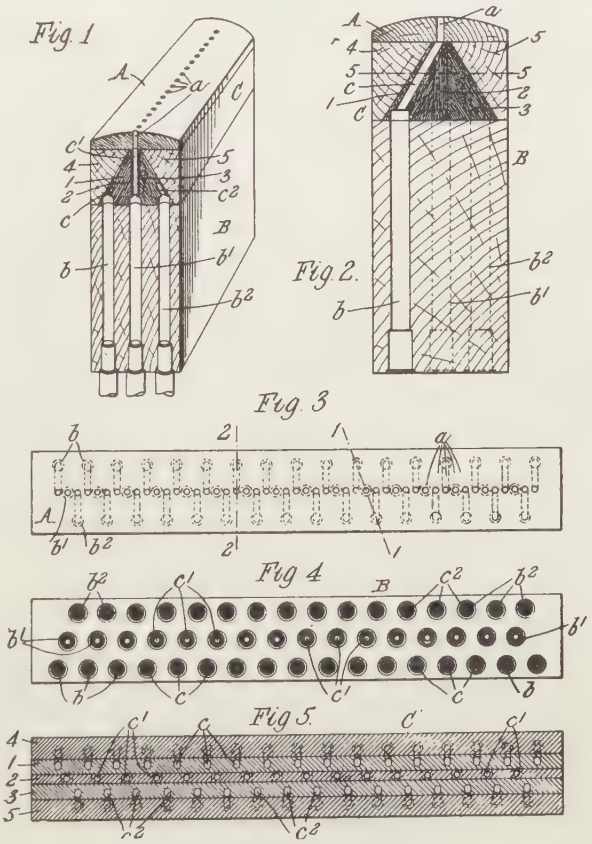

MAERTEN TRACKER BOARD.

by expansion and contraction, and less room is also required in the instrument for it and its operating mechanism. The opposite ends of the tracker ducts should, however, be spaced far enough apart to afford ample room for the connection therewith of the tubes leading to the pneumatic devices, and these tube ends of the ducts are preferably about equal in diameter to the internal diameter of the tubes, or much larger than the other ends thereof, to afford as free a passage as possible for the air. It is therefore customary to form the

large portions of the ducts in several rows and in staggered relation to each other. The ducts, whose large ends are not in line with the small ends thereof, must therefore have intermediate portions which extend more or less crosswise of the tracker-board, or at an angle to their end portions. A wooden tracker-board is desirable, because of the greater facility with which it can be made, but if the passages cross the grain of the wood and are located close together the

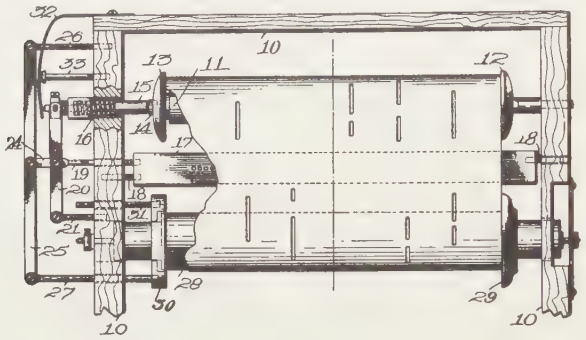

BROWN PATENT NO. 939,387.

air is apt to leak from one passage to another through the pores of the wood to such an extent as to seriously interfere with the operation of the instrument.

The primary object of this invention is to produce a tracker-board composed of pieces or sections so constructed and arranged that the air ducts can be bored with facility and accuracy and so that those portions of the ducts which are close together will not intersect the grain of the sections in

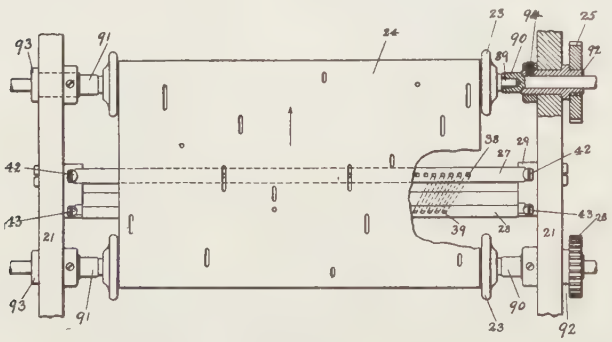

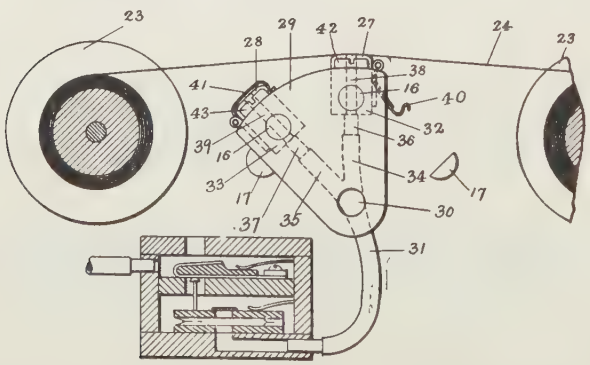

O'CONNOR TRACKER AND NOTE SHEET MECHANISM.

such manner as to allow the leakage of air from one to another of the ducts through the pores of the wood. To this end, the tracker-board is composed of separate upper, lower and intermediate sections or pieces firmly glued together. The upper section has a row or line of small holes through it for registration with the perforations of the note sheet; the lower section has larger holes through it arranged in different rows or in different planes to afford the necessary room for attaching the air tubes, and the intermediate section has holes through it arranged in rows and extending in the necessary directions to connect the large holes of the lower section with the small holes of the upper section to form continuous air ducts through the tracker-board. The intermediate section of the tracker-board consists of separate strips of wood glued together through each of which strips one of the rows of holes of the intermediate section passes, and these strips are made and arranged so that the grain of the wood in each piece extends as nearly parallel as practicable with the holes therein.

In this specification the terms "upper" and "lower" as applied to the tracker-board and the ends of the air ducts are used for convenience in description, but the tracker-board can be arranged in other than an upright position, and the term "upper" is to be understood to refer to the ends of the

Fig.1

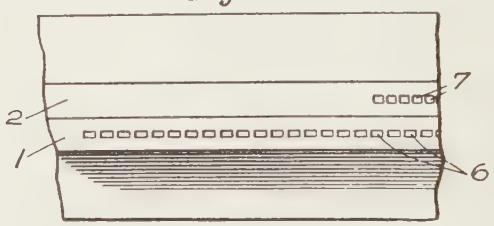

Fig. 2

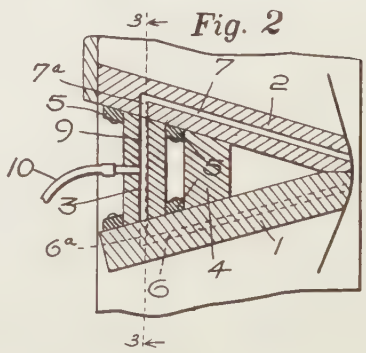

Fig. 3

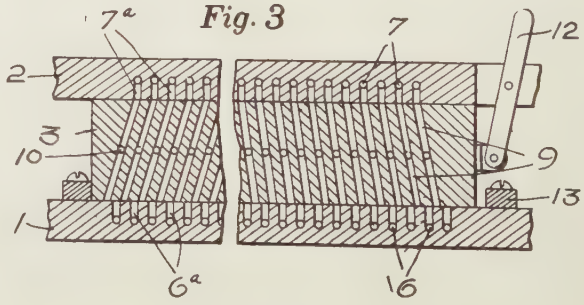

CLARK DUPLEX TRACKER.

ducts and the portion of the tracker-board next to the note sheet, and the term "lower" to the opposite ends of the ducts and the corresponding portion of the tracker-board.

SPECIFICATIONS OF MELVILLE CLARK PATENT NO. 915,018.

Be it known that I, Melville Clark, a citizen of the United States, residing at Chicago, in the county of Cook and State of Illinois, have invented new and useful Improvements in Duplex Tracker-Boards for Automatic Musical Instruments, of which the following is a specification, reference being had to the drawings forming a part thereof.

This application is a division of my original application No 357,318, filed February 14, 1907.

It relates to one of the modifications shown in that application, in which the claims were directed to a different modification.

The purpose of the invention is to provide an improved tracker-board construction for automatic musical instruments or players by which such instruments may be adapted to employ controlling sheets having their perforations cut according to different scales—that is spaced more or less widely from center to center of the perforations.

It consists of the features and construction herein shown and described as indicated in the claims.

SPECIFICATIONS OF O'CONNOR PATENT.

Be it known that I, James O'Connor, a citizen of the United States, and resident of New York, in the county of New York and State of New York, have invented certain new and useful Improvements in Tracker-Boards and Note-Sheet Mechanism for Mechanical Musical Instruments, of which the following is a full, clear, and exact specification.

This invention relates to the tracker-board mechanism of mechanically operated musical instruments and other instruments employing controlling sheets which are perforated in accordance with certain standards or scales.

The object of the invention is to provide means for using, with the same note sheet mechanism, sheets or rolls of different standards of width and spacing of their actuating perforations, or other controlling devices, and to provide means whereby the change to adapt the mechanism from a sheet of one standard to that of another may be quickly and easily made.

The invention is herein shown and described as applied to the note sheet mechanism of an automatically operated piano player.

SPECIFICATIONS OF BROWN PATENT NO. 939,387.

Be it known that I, Theodore P. Brown, a citizen of the United States, residing at Worcester, in the county of Worcester and State of Massachusetts, have invented a new and useful Tracker Mechanism for Musical Instruments, of which the following is a specification.

This invention relates to a tracker mechanism for pneumatic musical instruments. Many devices have been provided for automatically shifting the music roll or tracker back and forth by means of pneumatic devices controlled by channels in the tracker coming at or near the edges of the paper so as to keep the paper in proper position with respect to the tracker, but these devices generally have been of a complicated nature involving several pneumatic connections, and have not operated satisfactorily in practice as a general thing.

The principal object of this invention is to provide an exceedingly simple mechanical arrangement for keeping the tracker and music sheet central with respect to each other, without the use of any pneumatic connections for controlling the operation; also to provide for keeping the take-up roll on spool exactly in track with the music roll or spool so that the paper will be wound properly upon it.

THE PLAYER AND MUSICAL EXPRESSION

IN no other respect has the player been so criticized and opposed as it has on account of "want of expression," as its opponents have seen fit to put it. I herewith quote from an address of Dr. Chas. W. Needham, President of the George Washington University, as indicating just what the musical fraternity means by the term, "Want of Expression": "You can photograph the human face, but not the soul; you can copy sounds, but not interpretation. These inventions are wonderful as inventions, but I have yet to hear machine-made music which moves us like music that comes direct from the human mind."

When the artist seats himself at the keyboard of the conventional piano and proceeds to render a composition, the piano does not in and of itself produce the expression. That is done by the artist, largely by means of the foot-pedal mechanism. And when the performer seats himself at the player, he has it in his power to play loud or soft by means of a mechanism corresponding to that embodied in the manual piano, so that in that respect both instruments stand upon an even keel.

But it is asserted that the human performer can strike one key loud and another key soft in the same chord or arpeggio, and that this is not true of the player. There was a time when the foregoing objection had some foundation in fact, but that is a time that is numbered with the past. As a matter of fact, there is hardly an effect that can be produced by the human performer that cannot be duplicated by the player artist by means of the modern player. In fact, so well is this established that records made by the human performer on the keyboard are reproduced, recognized and sold as exact reproductions of the work of the human performer.

The writer, being a musician and a teacher of music, could not easily have overlooked, in developing the player, so important a matter as the question of expression; and, as a matter of fact, the player manufactured and exhibited by me in 1876 did contain a mechanism for modifying the tone.

It will be borne in mind also that the early instruments operated by means of the perforated roll were reed instruments or organs. All the expression possible in the reed instruments is done by means of the swells, and these my instrument of 1876 contained.

But prior to that date, the writer had made a series of experiments with the object of making the edge of the sheet govern the swells, as witness the following extract from the sworn testimony of the writer in the case of McTammany vs. Chinnock:

"Int. by Edwin H. Brown. What was that instrument, referred to in your preliminary statement as made in the early

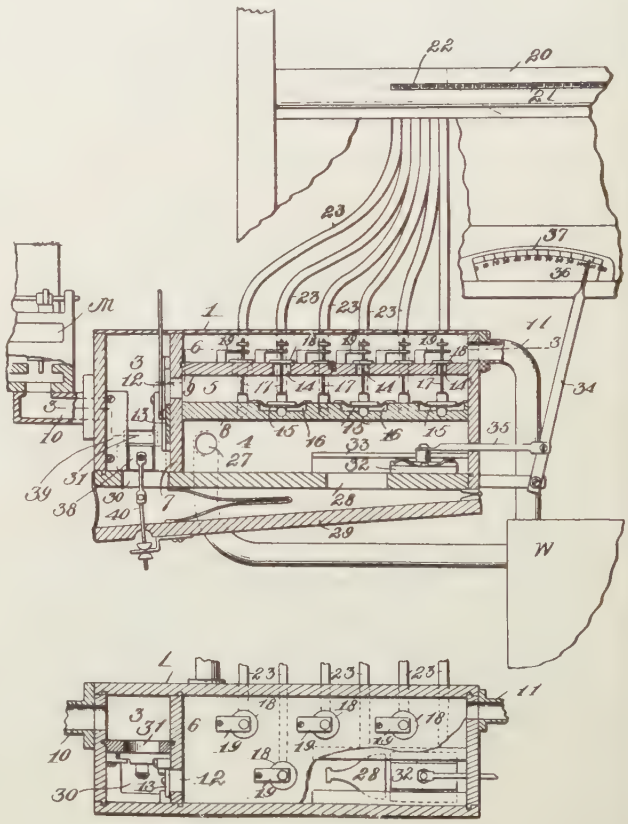

W. D. MOSES (W. M. DAVIS) PATENT—FIG. 1.

fall of 1871 by an organ builder of Germantown, like? Ans. It was as near like an organ as a bellows mounted in a frame containing foot pedals, and an action, and a crank, would look like a musical instrument. The perforated sheet was made of brass, for the reason that I used indentations on its edge to operate the swell."

From the foregoing, it will be seen that Chinnock and the writer not only recognized the need of means of expression, but actually took measures to provide it.

The next to take the subject under consideration was M. Gally, as shown in his patent No. 249,330: "The combina-

tion, with a mechanical expression device operated by a music-sheet, of connecting devices arranged to operate the expression-pedals of the instrument."

Gally was followed by others on the same line, but while my idea and that of Gally were actually introduced to the trade and thousands of instruments were made and sold, yet the arbitrary means of expression never was popular, and it was finally abandoned and the further development of the expression idea was in the direction of individual or independent expression, so that each person operating the player could impart to the roll his own idea of expression. This determination of the issue led to a new line of experiment, which had for its object the rendering of musical expression by the employment of various mechanical appliances, whereby the performer was enabled to increase or diminish the speed or the force of tones at will, as illustrated and described in the patent to Brown, No. 912,068, wherein are shown three thumb levers accessible to and under the control of the performer, one of said levers being adapted to shift the roll in order to secure proper registration with the tracker-bar. The patent to Davis, No. 814,521, presents one means of governing the tempo automatically.

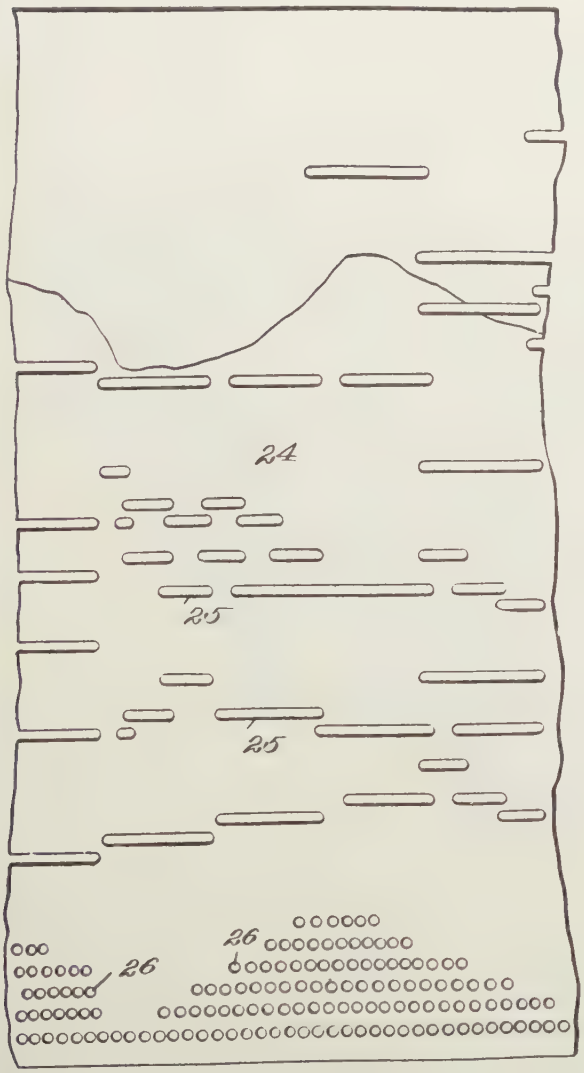

W. D. MOSES PATENT—Fig. 2.

SPECIFICATIONS OF W. M. DAVIS PATENT.

Be it known that I, Walter Moses Davis (formerly Walter D. Moses), a citizen of the United States, residing at New York City, in the county of New York and State of New York, have invented new and useful Improvements in Means for Governing the Tempo or Speed of Travel of a Music-Sheet in Mechanical Musical Instruments, of which the following is a specification.

This invention relates to improved means for governing the tempo or speed of travel of a music-sheet in mechanical musical instruments, and has for its objects mainly to provide means whereby the speed of a music-sheet may be controlled by means the operation of which is caused by supplemental perforations in the music-sheet coöperating with auxiliary ducts in the tracker-board.

Secondarily, it has for its object to combine such means of control with manually-operable means for controlling the tempo and means to compensate for variations in treadle action in connection with appropriate means whereby either description of controlling means may be utilized.

With these objects in view the invention consists in mechanism embodying the combination, arrangement, and mode of operation of parts.

While it is true that my player of 1876 contained means for varying the tone or, in other words, giving expression, and the same was true of Gally's instrument of 1881 and the Chinnocks instrument of a year or two later, yet the agencies employed and the effect produced were of the crudest and most primitive character. And while a steady and continued effort was under way both here and in Europe to develop the expression features of the player, and some progress had been made, yet it was not until 1904 that the music trade was enabled to point to the Welte-Mignon as the agency and instrumentality by which the practicability and desirability of the player as a musical instrument was to be demonstrated to the world.

And I can well recall the first time I heard it. Marc A. Blumenberg had called me up and informed me regarding the astonishing possibilities of the instrument. So I visited the Welte warerooms, where they were giving daily demonstrations of the instrument's musical capacity. I was accompanied by Mr. Waldemar Kaempffert, editor of the Scientific American, and one of the best amateur pianists in the city of New York.

The demonstrator inserted a roll and threw the switch, and presently the instrument began to render Liszt's classic conception of Heine's "Lorelei." I shall never forget the look of amazement that wreathed Mr. Kaempffert's face, as he turned towards me with a look of blank astonishment and remarked: "That is simply marvelous." And it was, and to me it was even more marvelous than to Mr. Kaempffert.

Expression Always the Player's Greatest Problem

From the beginning, the player had been antagonized and opposed. At first, it was treated with ridicule—then with suspicion. The mission of the opposition was to find fault. One objection after the other had been leveled against it, and as soon as we overcame one defect, we were confronted with another.

But the player was moving on, and its opponents were being driven from one position to another until they reached the question of expression, and upon that rock they made their final stand. Grant, quoth the player critic, that the player can play technically correct—well, there is one thing that there can never be any possibility of your doing, and that is, to play with expression. But before the prophecy had died upon his lips, the coming of the Mignon had been proclaimed and the player had advanced to higher ground. The introduction of the Mignon foreshadowed a new era. Whatever doubts had previously existed in the minds of musicians and the trade were swept away, and one great artist after the other recognized the claims to have overcome this in its Melodant, the Kingsbury Inner-Player in its Solo-Aid, the Autopiano in its Soloist, the Krell Auto-Grand in its device of the same name, the Accent Ventiduct of the Amphion, and the Pianola with its Themodist, and the various other names for such inventions which are more or less familiar to the trade at large. But the fact remains that the Welte player is the only one that will reproduce the touch and expression of any performer mechanically, but there is no one to manipulate this instrument. The roll of music is simply placed in the piano and the electric current is turned on, and then comes the wonder and stupefaction of the listener that any mechanical contrivance could accomplish what that instrument does.

In dealing with the question of expression I intend to include all patents that in any way deal with the subject

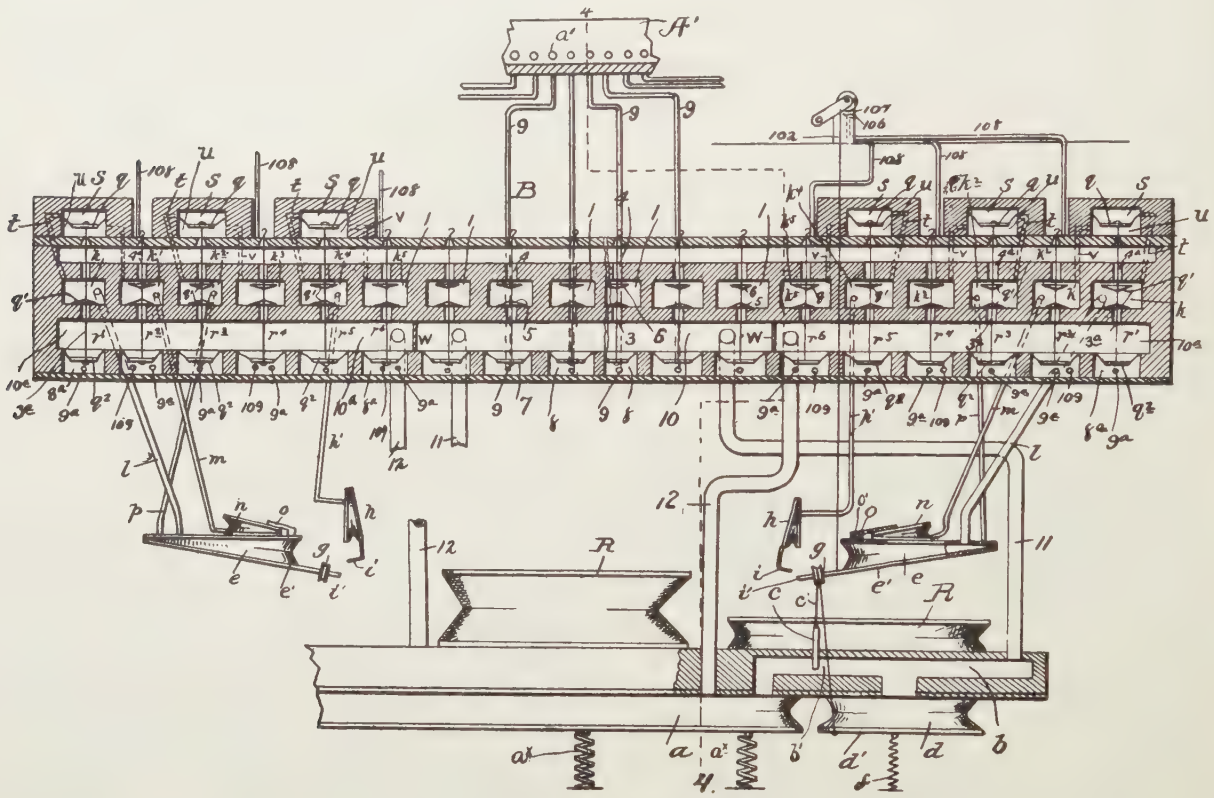

WELTE-BOCKISCH EXPRESSION PATENT.

player and proclaimed its mastery over the human performer.

By way of indicating the sensation produced upon the trade by the introduction of the Welte-Mignon, I herewith quote from an article by Marc A. Blumenberg, which appeared in the MUSICAL COURIER EXTRA of May 18, 1907:

The nearest approach to an absolutely perfect Player that this paper is aware of at the present time is the Welte Player, which is the most marvelous mechanical Piano-Player that is to be seen or heard today. There are differences of opinion as to the commercial aspect of the Welte proposition. The makers of the ordinary pneumatic players contend that those who purchase instruments of this kind want to have something to do with the manipulating of the instrument, or have something to do with the effects produced by the instrument. The accent, of course, is the great defect found in the ordinary Player. The Angelus

of expression, which is a pretty comprehensive term. The present chapter includes the patent of Welte and Bockisch, dealing with the expression in a general way; Bent's tempo indicator, dealing with the problem of time and measurement; Maier's specific expression device limited; Davis and Hattemer's system involving the principle of electricity in combination with a pneumatic system; and Frömsdorf's pneumatic tone-modulators.

WELTE-BOCKISCH PATENT

Be it known that we, Edwin Welte and Karl Bockisch, both subjects of the Grand Duke of Baden, and residents of Freiburg, in the Grand Duchy of Baden, German Empire, have invented certain new and useful Improvements in Mechanism for Regulating the Expression in Apparatus for Playing Musical Instruments, of which the following is a specification,

reference being had to the accompanying drawings, in which—

Figure 1 is a section through the main bellows, the expression bellows and the regulating bellows of the present invention. Fig. 2 is a vertical longitudinal section through a portion of the pneumatics for controlling the pressure of the fingers or levers upon the keyboard of the piano. Fig. 3 is a diagrammatic view showing the connection and relative arrangement of the main operating parts, the expression actions and tone-producing actions being shown in vertical longitudinal section, one regulating bellows and one pumping belows being omitted. Fig. 4 is a vertical transverse section on the line 4—4 of Fig. 3. Fig. 5 is a detail view of means that may be employed for operating the slide or valve *c* by hand. Fig. 6 is an end view of the parts shown in Fig. 5.

Similar letters of reference indicate corresponding parts in the different figures of the drawings.

This invention relates to that character of mechanical devices for playing pianos and other musical instruments wherein the tones of the piece of music are produced through the

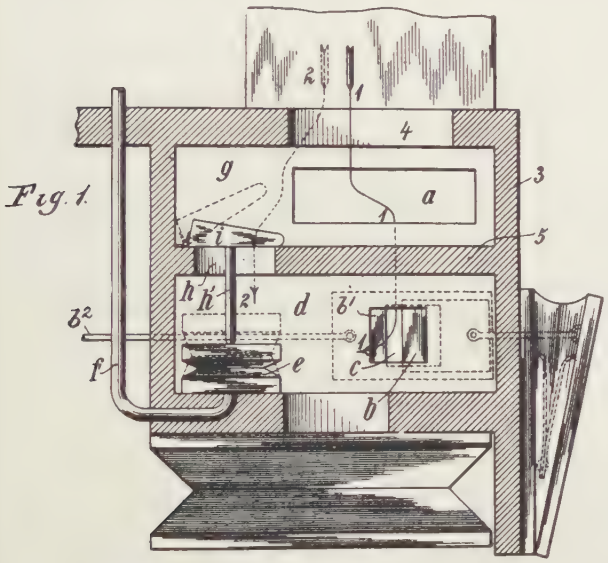

FRÖMSDORF TONE-MODULATING DEVICE.

medium of air currents controlled by a perforated note sheet. These currents are described herein as produced by lowering the pressure within the instrument below atmospheric pressure, and it is usually better to produce them in this way rather than by raising the pressure in the instrument above atmospheric pressure. The invention more especially relates to the expression means of such devices.

The principal object of the invention is to provide such devices with means whereby the piece may be reproduced with more accurate or artistic expression than at present, which expression is automatically controlled by the note sheet.

SPECIFICATIONS OF FROMSDORF PATENT

Be it known that I, Robert Frömsdorf, a subject of the King of Saxony, residing at Leipzig-Eutritzsch, Germany, have invented certain new and useful improvements in Tone-Modulators for Pneumatically-Operated Musical Instruments; and I do hereby declare the following to be a full, clear, and exact description of the invention, such as will enable others skilled in the art to which it appertains to make and use the same, reference being had to the accompanying drawings, and to letters or figures of reference marked thereon, which form a part of this specification.

In pneumatically operated musical instruments controlled by a perforated note sheet, the tone generating device is connected to the wind chest and is actuated by varying the air tension or pressure therein by throttling the connection or opening for the air in a suitable manner. In mechanisms now constructed it is a difficult matter to modulate a single tone as in doing so all the tones of a row or several adjacent rows controlled by the note sheet will be suddenly altered in strength. The throttling mechanisms used for controlling the strength of tone are mostly controlled by the hand of the operator, are difficult to operate properly in connection with single tone, and the adjustment of such mechanism by the note sheet has heretofore been a difficult problem.

The present invention relates in general to the throttling mechanisms for controlling the strength of tone by means of a single or double valve but not by the throttling mechanism used for other purposes. I do this by a suitable by-pass past the usual throttling mechanism whereby communication between the wind chest and reservoir is directly made so that the full air pressure can be directly used. Between the wind chest and reservoir or blower I therefore provide a by-pass which can be opened at the desired moment, either automatically or by hand. This by-pass is advantageously

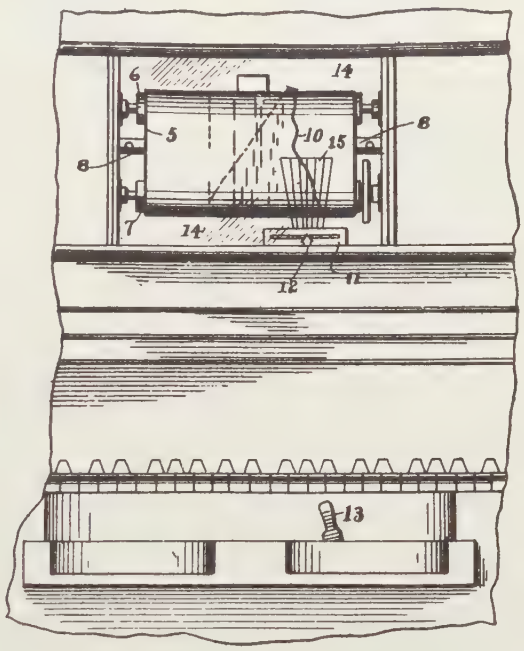

G. H. BENT TEMPO INDICATOR.

and preferably controlled from the note sheet, a hole in which admits atmospheric air to a hole or passage through the tracker or note board to a bellows or other inflatable device which by its inflation actuates the by-pass valve. However, the by-pass can be operated by hand actuated mechanism if desired.

SPECIFICATIONS OF G. H. BENT PATENT

Be it known that I, George H. Bent, a citizen of the United States, residing at Hinsdale, in the county of Dupage and State of Illinois, have invented certain new and useful improvements in Tempo-Indicators for Mechanical Musical Instruments, of which the following is a specification, reference being had therein to the accompanying drawing.

This invention relates to improved devices for varying and controlling the time or tempo of the music produced by mechanical musical instruments in which the note sounding devices are controlled by a longitudinally traveling music-sheet.

It is customary in mechanical instruments, which term is here intended to include mechanical players for key-board musical instruments either built into or separated from the instrument itself, to provide means for modifying the tempo

by altering the speed at which the music-sheet is moved over the tracker-bar, such means being usually manually controlled by a lever extending to a convenient point for the hand of the operator or player and provided with a pointer adapted to move over or adjacent the tempo-scale which indicates the time. It is also customary to provide the music-sheets used on such mechanical musical instruments with symbols or indicating means extending in sequence in the general direction of its length but deviating in zig-zag or sinuous manner laterally from side to side indicating the speed at which the sheet is to be moved over the tracker, this usually being provided by a tempo-line as is now well known.

My present invention unites with the tracker-bar and tempo-pointer, a tempo-scale or indicator by which any composition may be correctly phrased by the player or operator moving the tempo-pointer to a mark corresponding with the mark on the tempo scale or indicator indicated by the tempo-symbol at the tracker-bar.

I will describe a practical embodiment of my invention and then point out its novel features in the appended claims.

SPECIFICATIONS OF MAIER PATENT NO. 1,009,330.

Be it known that I, Louis H. Maier, a citizen of the United States, and resident of New York city, borough of Bronx, in the county of New York and State of New York, have invented certain new and useful improvements in Expression Devices for Musical Instruments, of which the following is a specification.

The object of my invention is to provide improved means to permit the damping or softening of the tones at will of various series of strings of a piano, whereby the strings of one, two or more such series may be damped as desired, to produce subdued or pianissimo effects.

In carrying out my invention I provide a plurality of hammer rails, each rail being associated with a desired number of hammers of the piano action, and each of such rails is connected with operating means for independently operating each such rail, the means I have shown comprising concentrically disposed oscillatory members, each member being connected with one of the hammer rails to support and operate the same, with means for independently operating, as desired each of such members.

My invention also comprises novel details of improvement and combination of parts that will be more fully hereinafter set forth and then pointed out in the claims.

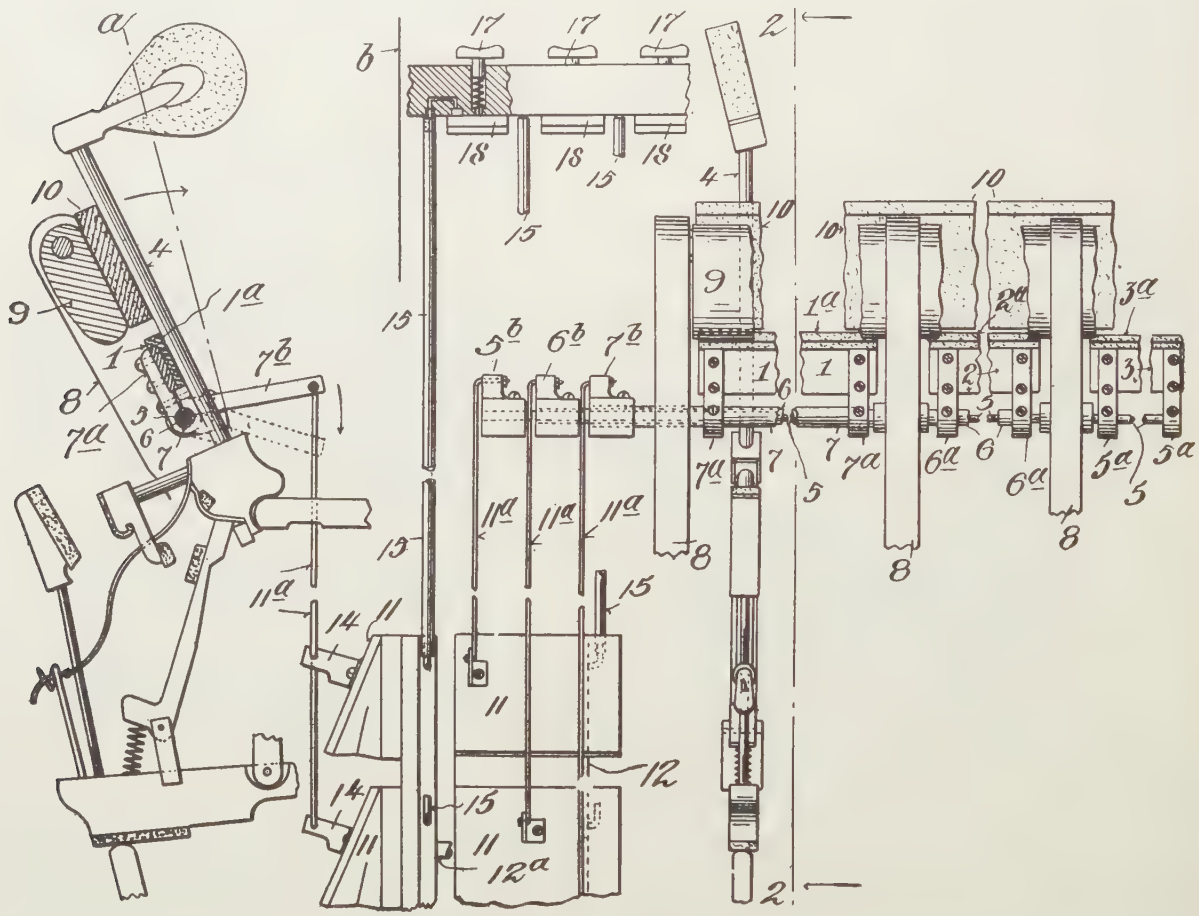

MAIER PATENT NO. 1,009,330.

SPECIFICATIONS OF DAVIS-HATTEMER PATENT

Be it known that we, Walter M. Davis and Justus Hattemer, citizens of the United States, residing at New York, county of New York, State of New York, and West New York, county of Union, State of New Jersey, respectively, have invented certain new and useful improvements in Electric Accenting Devices for Pneumatic Musical Instruments; and we do hereby declare the following to be a full, clear, and exact description of the invention, such as will enable others skilled in the art to which it appertains to make and use the same.

This invention relates to self-playing musical instruments and has for an object to provide electrically actuated means

for accenting the notes of the theme or any other part of the music which it is desired to accept.

A further object of the invention is to provide brushes with improved means for projecting the same over the tracker-bar into position for engagement through an opening in the music sheet with contacts carried by the tracker-bar and with means electrically connected with such brushes and contacts for actuating the accenting device.

A further object of the invention is to provide, in conjunction with an accent box, as for instance such an accent box as disclosed in Patent No. 902,728 to one of these applicants, valves for controlling primaries which in turn control such accent box with electrical means for controlling the valves and means whereby the electrical means is energized by the passing over the tracker-bar of openings in the music sheet.

A further object of the invention is to provide an accent box having a primary with a conduit leading to the primary and a valve for closing the conduit also with an electro-magnet positioned to open the valve when the magnet is energized and an electric circuit including the magnet and con-

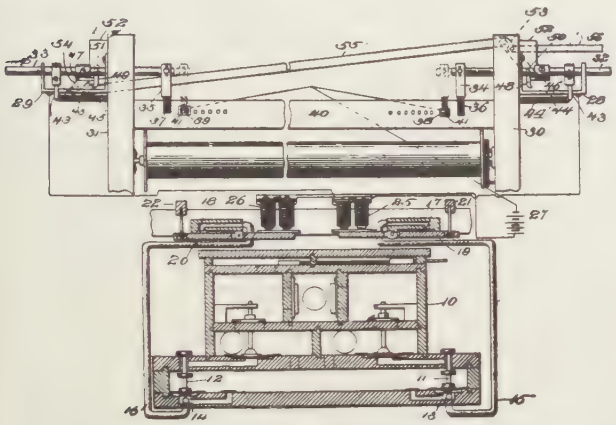

DAVIS-HATTEMER ELECTRIC ACCENTING MACHINE.

tacts adapted for engagement through an opening in the music sheet as the music sheet passes over the tracker-bar.

A further object of the invention is to provide improved mechanism for controlling the position of the brush relative to the tracker-bar.

With these and other objects in view the invention comprises certain novel constructions, combinations and arrangement of parts.

In this chapter I have taken the liberty to present without comment the following specifications and drawings:

Frank C. White's Expression-box for autopneumatic musical instruments.

Oren J. Fairchild's mechanism for self-playing musical instruments.

The joint patent of Krell and Welin for a tone-softening device for musical instruments.

Frederick Grundy's expression controller for musical instruments.

Peter Welin's automatic modulating mechanism for musical instruments.

All of these relate in one way or another to musical expression by means of mechanism.

Leschetizky's standing as a teacher has often been discussed and always with the conclusion that he is one of the greatest, if not the greatest teacher of music that ever lived. It follows, therefore, that if he is a great teacher, he must have been a correspondingly great student and that he must have applied himself dilligently to the task of developing his faculties and especially to a study of the piano from its every angle.

Having thus boxed the compass upon the subject and knowing so well the possibilities locked within the wooden walls of the king of musical instruments—the piano—and, on the other hand, understanding and realizing the shortcomings and deficiencies of the human being even at his best, is it any wonder that he should have paused in the midst of a composition to exclaim with a voice vibrating with mortification: "Three hundred years from now there will be no such a thing as playing the piano by hand"? And as he stood by his instrument, contemplating its wonderful capacity for musical production and reproduction and then let his eyes drop upon the five stubby fingers of each hand, realizing how inadequate they were to meet the demands of the situation, is it any wonder that he should proclaim himself as he did?

What are Leschetizky's feelings as he listens to musical works being reeled off with taste and expression—not only the masterpieces of Beethoven, Bach and Brahms, but even his own compositions? Is it conceivable that the great master would denounce the player, pronounce anathemas against it and sneeringly allude to its product as "canned music"? Oh, no! he could not do that. It would be inconsistent with his own prophecy. Leschetizky is a seer. He possesses that breadth and depth of insight into coming events that have ever characterized the great masters and their works, which in so many instances were written not for the time, but for posterity.

So, if beyond the heavens today there is a land where spirits dwell and from it the great masters are contemplating this mundane sphere, I know that they are not hearkening with impotent rage to the renderings of the modern player nor invoking the wrath of high heaven against its inventor and the men who are trying to bring it up to the great masters' standard of artistic excellence and perfection.

Leschetizky is an old man today, having passed the three-score-and-ten milestone thirteen years ago, and he was a comparatively young man when he uttered his remarkable prophecy. At that time, neither the writer nor any of the other claimants to the inventorship of the player had even conceived of such a thing.

The great master had weighed the conventional piano in the balance and found it wanting. Thereupon, he proclaimed the player as a necessity. Necessity is said to be the mother of invention—hence the player.

SPECIFICATIONS OF FRANK C. WHITE EXPRESSION BOX.

Be it known that I, Frank C. White, a citizen of the United States, residing at Meriden, New Haven county, State of Connecticut, have invented certain new and useful Improvements in Expression-Boxes, for Autopneumatic Musical Instruments, of which the following is a full, clear, and exact description.

My invention relates to an improved expression controlling mechanism for autopneumatic music playing instruments.

The object of the invention is to provide an improved apparatus for the control of the air tension within the action chest whereby the action pneumatics may be operated with different degrees of force for the purpose of securing louder and softer effects.

In the drawing I have shown, conventionally and in section, so much of the apparatus as is necessary to a full understanding of my invention.

1 represents a casing or box.

2 represents a duct leading into the casing from the action chest and for the purposes of this case may be assumed to be a part of said chest.

3 represents the exhauster passage or duct.

The particular form of the action pneumatics in the action

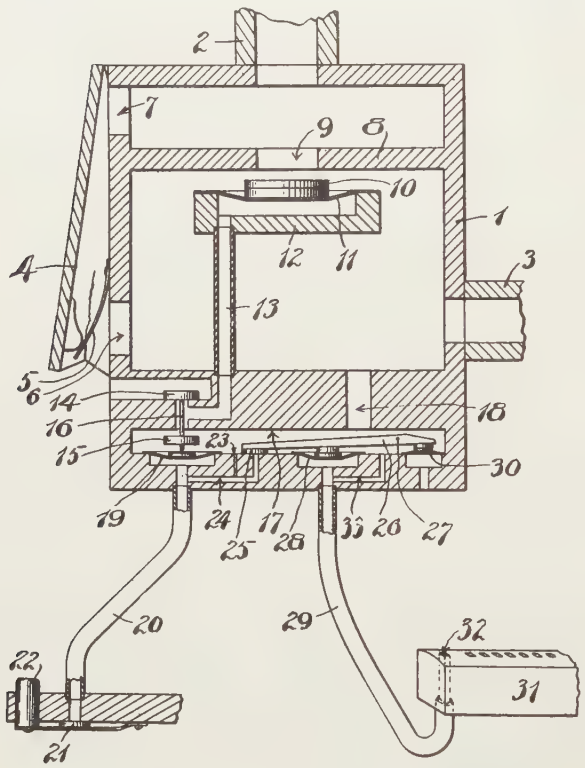

FRANK C. WHITE EXPRESSION BOX.

chest, as well as the exhauster, is immaterial to this invention.

4 represents a regulator bellows which is by preference employed.

5 is a valve controlled by the bellows 4, said valve being adapted to control a port 6 leading from said bellows into the space within the casing 1.

7 is a port leading into the aforesaid bellows from the space within the casing 1.

8 is a partition dividing the space within the casing 1.

9 is a port through the partition 8.

10 is a valve adapted to close the port 9.

11 is the movable part of a pneumatic for the valve 10, 12 is the body portion of said pneumatic. 13 is a duct leading from said pneumatic to the controlling valves 14—15. These valves are carried upon a stem 16. The valve 14 opens the duct 13 at times to the atmosphere, while the valve 15 opens the duct 13 at times to the tension of air within that part of the casing 1 below the partition 8, said communication being effected in this particular embodiment through a chamber 17 and a passage 18.

19 is a pouch pneumatic which may be provided with a central thrust plate or disk constituting a bearing arranged to engage the lower end of the stem 16. When the pouch 19 is distended, it will shift the valves 14—15 from the position shown in the drawing to that in which the valve 15 closes the duct 13 to the inside tension and valve 14 opens said duct 13 to atmosphere.

20 is a duct leading to the atmosphere and normally closed by a valve 21.

22 represents a press button representing one effective means for receiving finger pressure to open valve 21.

23 is a bleed hole leading from the chamber 17 into a passage 24, which connects the interior of the duct 20 and pneumatic 19 with the interior of said chamber 17.

The opening from the passage 24 into the chamber 17 is controlled by a valve 25 mounted in this instance upon a lever 26 pivoted at 27.

28 is a pouch pneumatic which at times is in communication with the atmosphere through a duct 29.

30 is a pouch pneumatic in communication with the atmosphere at all times and bearing against the short arm of the lever 26. The effect of the pneumatic 30 is to exert a pressure on the lever 27 to normally close the valve 25.

31 is a tracker. 32 is an opening therein for duct 29.

33 is a bleed hole from pneumatic 28 to the interior of casing 1 below partition 8.

The operation is as follows: Assuming the parts stand as shown in the drawing. The exhauster 3 will now draw the air from the action chest 2, the course of said air being

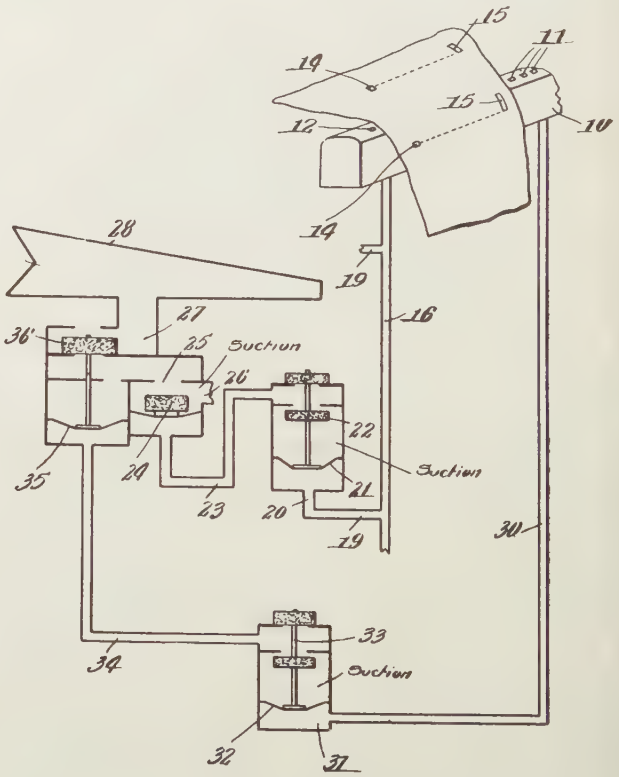

WELIN AUTOMATIC MODULATING MECHANISM.

through passage 9, and also through passage 7 and 6. When such a condition obtains, it is obvious that the same, or substantially the same, tension as is being produced in the exhauster will occur within the action chest. If it is desired to lower or cut down the tension in said chest for the purpose of causing the action pneumatics therein to act with less vigor, the passage 9 is closed, whereupon the only passage for the air is through the passages 7 and 6. This condition is manually effected as follows: The operator opens the valve 21, whereupon air at atmospheric pressure rushes in through the duct 20 to distend the pouch 19, shifting the

valves 14—15. This closes the duct 13 to the inside tension and opens it to the atmosphere so that air may rush in through the duct 13 to distend the pouch pneumatic which operates the valve 10, causing said valve 10 to close the passage 9. The moment the valve 21 is again closed, the pouch pneumatic 19 is caused to collapse, being bled by the hole 23, whereupon the original condition shown in the drawing is restored. It will be observed that the valve 10 opens in a direction not against the direction of the flow of air through the passage 9, but, on the contrary, in the same direction, with the result that the quick opening of valve 10 does not cause any popping noise as frequently occurs where a valve operates in a direction opposite to the direction of the passage of the flow of air. With the parts thus far referred to in describing the operation, it is obvious that the valve 10 would remain closed only so long as the duct 20 is open to atmosphere.

In many instruments it is customary to provide automatic means, distinct from a manually controllable means, for varying the air tension in the action chest, and to that end I have provided an improved means for that purpose. This improved means comprises the aforesaid valve 25 carried by the lever 26 and controlled by the pneumatics 28—30. The duct 29 which communicates with the pouch pneumatic 28, leads, as described, to an opening 32 in the tracker board 31. Whenever a note sheet, properly perforated, traverses the tracker board and a perforation registers with the inlet 32, air at atmosphere will be permitted to enter the pouch pneumatic 28 with sufficient force to operate the lever 26 and open the valve 25, instantly putting the pouch pneumatic 19 in communication with the tension of air in the casing 1, with the result that said pneumatic 19 will be caused to collapse, thereby moving the valves 14—15 to the position shown in the drawing and opening the valve 10. In this connection, it should be first understood that whenever it is

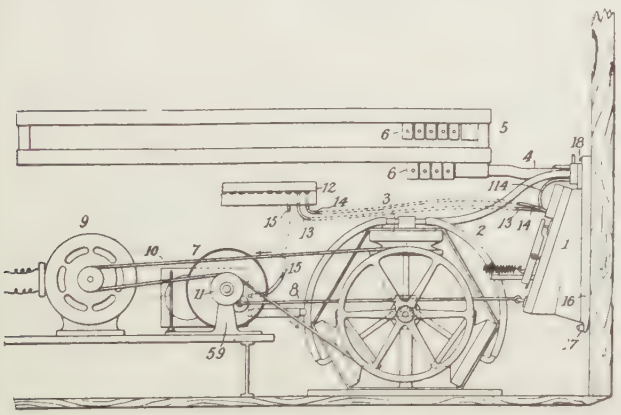

FAIRCHILD EXPRESSION MECHANISM.

desired to operate the tension controlling mechanism automatically, the valve 21 should be held or latched open so that valve 10 will stand normally closed. Under such conditions, so long as a note sheet closes the opening 32 in the tracker board, the pouch pneumatic 28 will be collapsed so that the valve 25 will close its passage, thereby preventing air at atmospheric pressure from entering the casing 1 except such as may enter through the small bleed hole 23 which is so insignificant as to be negligible under these conditions. When a perforation in the note sheet registers with opening 32, air at atmospheric pressure freely enters pouch pneumatic 28 and opens valve 25, whereupon pouch pneumatic 19 is operated to shift valves 14—15 so as to open valve 10.

When an instrument is equipped with both automatic and manual tension controlling mechanisms, such as described, it is obvious that the automatic tension controlling mechanism will have no effect upon varying the tension of air within the casing 1 unless the valve 21 is open; hence, when being manually controlled (the valve 21 being closed normally) the operation of the valve 25 will have no effect in varying the tension even though the note sheet has perforations for duct 32.

From the foregoing it will be seen that the opening of the duct 20 performs the function of closing the valved passage 9, whereas the opening of the duct 29 performs the function of opening the valved passage 9, it being essential in this particular form of construction that the admission of air at atmospheric pressure at these two different points, namely, 21 and 31, shall operate the valve 10 in relatively

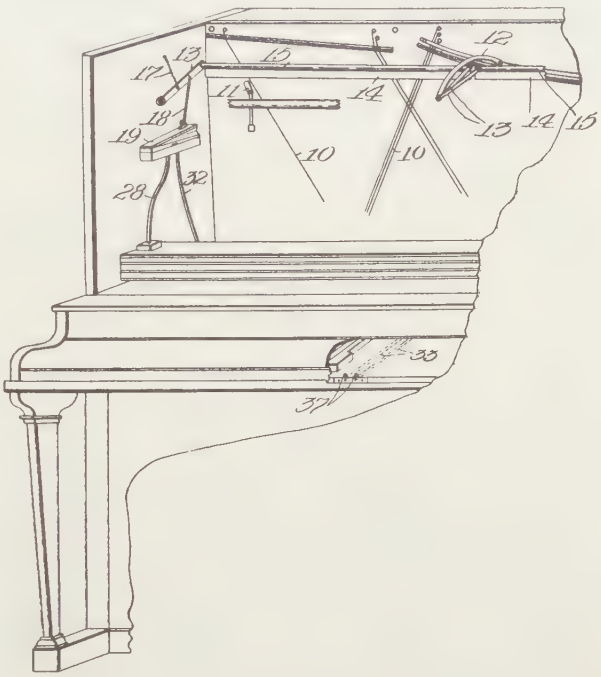

KRELL-WELIN TONE-SOFTENING DEVICE.

opposite directions in order that said manual and automatic controlling mechanisms shall be independently operable.

While in the preferred construction it is desirable that the passage employed when low tension is occurring shall be provided with a regulator such as the pneumatic 4 controlling the valve 5, in a broad sense it should be understood that my invention should not be limited to a regulated low tension passage since the area of such passage may be such that a relative low tension will occur whenever this is the only passage being utilized. Again, it should be understood that my invention in a broad sense need not be limited to having two separate or parallel air passages, since one passage might be sufficient, for example, the passage through the pneumatic 4, the same being provided with a high tension controlling valve operated by the pneumatic 11. Such a valve is shown in my former Patent, No. 852,751, dated May 7th, 1907.

SPECIFICATIONS OF WELIN AUTOMATIC MODULATING MECHANISM.

Be it known that I, Peter Welin, a citizen of the United States, residing at Newcastle, in the county of Henry and State of Indiana, have invented a new and useful Automatic Modulating Mechanism for Musical Instruments, of which the following is a specification.

This invention relates to that class of music playing devices which, whether in the form of automatic pianos or the like or in the form of separate devices for playing ordinary musical instruments, are operated automatically from the music sheet and the tracker-bar.

Although this invention contains certain additional features, it is in general an improvement on the invention set

forth and claimed in my prior co-pending application for an automatic playing attachment for musical instruments filed Dec. 7, 1905, Serial No. 290,749. In another co pending application also on a pneumatic action for musical instruments filed Jan. 7, 1907, Serial No. 351,085, I have shown and broadly claimed certain improvements on the same invention.

This case relates to the same subject matter, but refers especially to that embodiment thereof in which the modulating mechanism is controlled automatically from the tracker-bar either in the piano player or the combination piano.

It also includes certain improvements in the throttle mechanism for avoiding a thumping action during the playing of the modulated notes, means for adjusting the tension of the throttling valve, and certain improvements in the bleeding

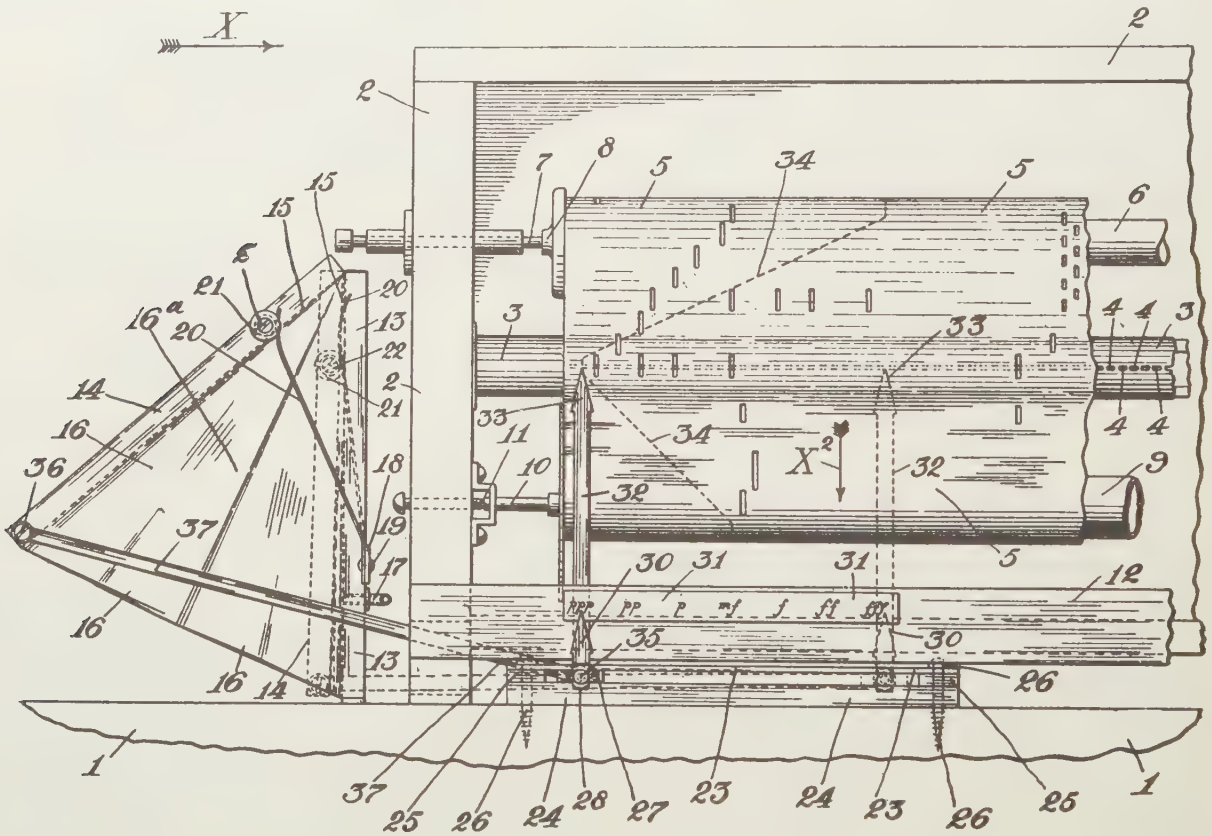

GRUNDY EXPRESSION CONTROLLER.

stood that many features thereof are equally applicable to playing devices for musical instruments.

SPECIFICATIONS OF KRELL-WELIN TONE-SOFTENING DEVICE.

Be it known that we, Albert Krell and Peter Welin, citizens of the United States, residing, respectively, at Connersville, in the county of Fayette and State of Indiana, and Worcester, county of Worcester, and State of Massachusetts, have invented a new and useful Tone-Softening Device for Musical Instruments, of which the following is a specification.

This invention relates to a stringed musical instrument.

The principal objects of the invention are to provide means divided up into sections in any desired way for softening the blows of the hammers of the instrument; and to pro-

mechanism, these latter features not being limited to said automatic control.

The principal objects of the invention are to provide improved modulating means controlled automatically from extra channels in the tracker-bar, to accomplish this result in a simple and convenient manner, to provide for operating such means to modulate the notes individually or in sections; also to provide improved throttling mechanism for producing the modulating effect, to prevent the secondary valve which is usually employed, from thumping during the playing of the modulating notes, to provide means for adjusting the tension of the throttling valve and generally, to improve and simplify pneumatic actions for instruments in which the operation of the entire modulating device is controlled from the tracker-bar.

While this invention is illustrated as, and preferably is, applied to an automatic musical instrument, it is to be understood that it is not limited to such use, but is applicable to any musical instrument, whether played automatically or manually.

vide means conveniently located on the keybed for operating said sections independently of each other; also to improve and simplify the construction of divided muffling or softening devices.

Many different schemes have been proposed for dividing the action of musical instruments so as to modulate or accent a portion thereof without interfering with the rest, but as a general proposition they have been of a complicated nature, or in some cases of such a character that they were likely to get out of repair and were not easily accessible for that purpose. They have also been open to numerous other objections which need not be specified in detail here.

The principal object of this invention is to provide for softening the blows of the hammers in a most simple and convenient manner, and at the same time to provide means therefor which will always work in the same way and will have exactly the same effect on all the notes which it is in-

tended to soften, and which can aways be depended upon to have a uniform softening effect.

SPECIFICATIONS OF GRUNDY EXPRESSION CONTROLLER.

Be it known that I, Frederick Grundy, a citizen of the United States, residing at Los Angeles, in the county of Los Angeles and State of California, have invented certain new and useful Improvements in Expression-Controllers for Musical Instruments, of which the following is a full, clear, and exact specification, reference being had to the annexed drawings and to the letters and figures marked thereon.

The mechanism constituting my invention is provided with an indicator adapted to follow an expression line, which line is drawn upon a perforated music sheet, whereby an accurate degree of intensity of tone, varying from "pianissimo" to "fortissimo" may be produced by a musical instrument to which my invention is attached, and whereby the exact musical effect, or rendering intended to be expressed by the composer of a musical composition may be accurately reproduced upon such mechanical musical instrument.

The class of mechanical musical instrument to which my invention more particularly relates, is that wherein exhaust bellows are provided, whereby air is drawn through the perforated music sheet, thence through the various mechanical operating devices, and finally through the main bellows which is operated by pedal action controlled by an operator.

While there are at present in use certain devices for producing musical effects in the mechanical musical instruments to which my invention relates, such devices are deficient in the matter of the production of the necessary intermediate variations of intensity of tone between extreme softness and extreme loudness; and the said intermediate variations in intensity are obtained solely by the varying amount of muscular force exerted by the operator upon the pedals of the instrument. The amount of exhausting effect produced in the main bellows, and the corresponding intensity of tone thereby obtained from the instrument is directly proportionate to the amount of muscular force expended upon the pedals attached to the said main bellows, and I therefore apply in my invention a device operated by the exhausting action of the said main bellows whereby a corresponding effect is produced in an auxiliary, smaller bellows which is normally held expanded by a spring, or springs, and which is caused to collapse more or less as the air is exhausted therefrom to a greater or less degree; the interior of the said auxiliary bellows being in communication through an air conduit or pipe with the interior of the said main bellows. The movement of a movable member of the smaller bellows is conveyed by suitable connections to an indicator moving in guides and the free end of which is caused to follow the expression line upon the perforated music sheet.

SPECIFICATIONS OF FAIRCHILD EXPRESSION MECHANISM.

Be it known that I, Oren J. Fairchild, a citizen of the United States, residing at Binghamton, in the county of Broome and State of New York, have invented certain new and useful Improvements in Expression Mechanism for Self Playing Musical Instruments, of which the following is a specification, reference being had to the drawings accompanying and forming part of the same.

My invention relates to self-playing musical instruments, for example pianos, of the so-called "pneumatic" type—that is, instruments operated by pneumatic pressure—in which the playing instrumentalities are under the control of a perforated sheet or band of, generally, the usual kind.

The chief object of the invention, briefly stated, is to provide mechanism for putting into the musical composition as played, what is commonly called "expression,"—in other words to provide mechanism, under the control of the perforated tune sheet, for varying the loudness of the sound so as to make the music more effective or pleasing and to bring out, in a measure at least, the "musical idea" which a musical composition is supposedly intended to express.

Heretofore various means have been devised, and used with satisfactory results, for putting the "expression" under the control of the operator, who by the manipulation of suitable controlling devices can vary the loudness of the playing to suit his individual fancy. So far as I am aware, however, no thoroughly satisfactory means have been proposed for varying the expression under the control of the tune-sheet; and this in spite of the fact that musical instruments, for example self-playing pianos, have been on the market for a considerable period, in which all the functions of the instrument are under the control of the tune-sheet without any attention on the part of an operator except merely to insert the sheet and start the motor. My present invention therefore contemplates the provision of expression mechanism for the purpose referred to, which shall be thoroughly effective and reliable in operation and result, and as simple and inexpensive as the nature of the case will permit.

In carrying out my invention in the preferred manner I provide a bellows or equivalent device, which from its purpose and function may be appropriately termed the "expression bellows." This bellows is connected both to the air pump and to the so-called "wind chest" or "vacuum chamber," which latter is operatively connected with the playing pneumatics. Being thus connected with the vacuum chamber it is clear that any expansion of the bellows without the admission of air thereto will have the effect of "increasing the vacuum" in the vacuum chamber, causing the playing pneumatics to be acted on more powerfully by the atmospheric pressure and hence causing harder blows to be struck on the strings and corresponding louder sounds to be produced. On the other hand, it is equally clear that if air be admitted to the expression bellows through a suitable valve the effect will be to "decrease the vacuum" in the vacuum chamber and so result in softer playing; while if the valve be kept closed, so that the pump can withdraw air from the expression bellows and vacuum chamber to a greater extent than the normal, the loudness of the playing will be increased so long as the valve is kept in that condition. Thus by the expansion of the bellows without the admission of air thereinto or into the bellows-vacuum-chamber system I provide for so-called "accenting," that is, for a quick and pronounced but temporary increase in the loudness of the note or notes: while by the control of the expression bellows valve I provide for a more sustained increase or decrease of loudness; it being understood of course that in any case the air pump continues to operate at its normal rate. Hence my invention operates to produce "expression" in the playing of a composition, not by controlling the pump, as by varying its speed or otherwise, but by varying the "degree of vacuum" in the vacuum chamber or wind chest through the instrumentality of a suitable pneumatic device, namely, an "expression bellows."

With this brief statement of the underlying principle of my invention, reference may now be made to the annexed drawings, which exhibit what I consider the best mode of applying that principle; it being understood, in this connection, that the devices illustrated, and now about to be described more or less in detail, constitute merely the preferred embodiment of the invention.

APPENDIX

THE MORSE SPECIFICATION.

"A new organ with either diapason or the principal in front with one or more sets of keys, the bellows to go with either the feet or the hands, by which any person, though unskilled in musick, may be taught in an hour's time to play with great exactness and with their proper graces, either single or double, with preludes and interludes, all psalm tunes, fuges, volunteries, and anthems that are usually sung in churches or chappells, or any other musick tho' never so difficult, or what length or compass soever, and that by this invention a fuller, thorough bass may be pla'd than can possibly be performed by the hands or fingers alone on the common keys; and this is performed entirely without vowls or barrels, and in a third part of the room, the musick being prickt on both sides of leaves or half-inch wainscot, eight or ten psalm tunes being contained on a board about the size of a large sheet of paper and contained on a board about the size of a large sheet of paper and may be worked by clockwork, jack, or winch, and is made after a new method to play louder or softer by a division on the sound board; and that this organ may be made for a much lower price than all others heretofore, and therefore will be very proper to be made use of in churches or chappels in small parishes that are unable or unwilling to be at the expense of the constant attendance of an organist, or in gentlemen's houses or in private familys."

The foregoing reference to a possible automatic musical instrument, or rather impossible musical instrument, is known as the Morse Specification and is the first suggestion on record of an automatic musical instrument to be actuated by a perforated device.

But no practical instrument could have been constructed on the lines laid down by Morse, nor is there any record of any attempt on his part to construct an instrument in conformity with his suggestion.

And in the absence of a model, drawing or claims, no one else could construct an instrument on the lines laid down by Morse: therefore, the author of this work attaches no value or importance to the Morse Specification; and only incorporates it within the book as indicating the date when first the idea of the perforated device for the operation of a musical instrument occurred to man. The Morse Specification is English and the date thereof, 1731, and by reason of the absence of a drawing, it cannot take a place with legitimate patents such as that of Seytre, Bain and others that follow in regular chronological order. Hence this appendix. JOHN MCTAMMANY.

TABLE OF CONTENTS

PAGE.

1.—The Purpose of This Writing.
2.—The Justinian Morse Specifications of 1731.
Player Alleged Conception of the Nineteenth Century and of an American.
Absurdity of Morse Specifications Exposed.
3.—The Perforated Board Record Device of Morse.
4.—No Drawings or Claims Accompanied the Morse Application.
5.—The Claude Felix Seytre Patent of 1842.
The Perforated Paper Record Device of Seytre.
9.—The Elements of the Seytre Specifications.
10.—The Alexander Bain Patent of 1847.
12.—The Direct System of Operation of Bain.
One Bain Drawing Is Proven Fraudulent.
13.—The Carhart Suction Bellows.
14.—The Charles Dawson Patent of 1848.
21.—Former Patents European; America Now Takes Hand.
22.—The A. F. Hunt and J. S. Bradish Patent of 1849.
23.—The Intervening Mechanism System.
25.—The Finger Mechanism System of Note Selection.
26.—The M. Pape Patent of 1851.
Impracticability of Patents Issued to Date.
Pape's Attempts to Control Expressions.
29.—John McTammany Is the Inventor of the Player and Father of the Player Industry as Well.
Justice Blatchford on Abandoned Inventions.
First Perforated Paper Musical Instrument Exhibited by McTammany in 1876.
The Definition of a Player.
30.—The Elements of a Player.
31.—The McTammany Priority of 1866.
The John McTammany Patent of 1883.
The Invention of the Wind and Spring Motors.
The Decision of the Commissioner of Patents in re McTammany Priority.
32.—Summary of Progress in Player Invention.
33.—McTammany's First Player a Crude Affair, But Contained Essential Elements.
An Appreciation of Those Who Have Developed the Player, by McTammany.
Attachment Players Exhibited in 1876.
34.—Cause of Delay in Securing the McTammany Patent.
The First Player Action and the Modern Action.
The First Practical Primary Pneumatic System.

PAGE.

35.—Affidavit of James H. Salmon.
Affidavit of George Currier.
The McTammany Advertising Circular of 1877.
McTammany Moves from Cambridgeport to Worcester, Mass., 1879.
Affidavit of Walter G. Ingalls.
Affidavit of Clarence E. Steere.
37.—Affidavit of Frank A. Beane.
38.—Affidavit of Daniel A. Tourtellotte.
Affidavit of John McTammany.
39.—The John McTammany Patent of 1883.
41.—Monroe Organ with McTammany Pneumatic Action.
42.—Taylor and Farley Organ with McTammany Pneumatic Action.
The Primary and Secondary Pneumatics in Use.
The Monroe Organ Reed Company Agreement.
43.—The Monroe Orchestrone Organ with McTammany Pneumatic Action.
The Value of Patent and Other Law.
Taber Organ with McTammany Pneumatic Action.
Other McTammany Patents and Inventions.
44.—Affidavit of L. A. Wernery, Mechanical Draughtsman.
The Building Up of the Early Player Industry.
45.—The M. Fourneaux Patents of 1863 with Pin Cylinder.
49.—Fourneaux's Player of 1863 Not a Perforated Sheet Instrument.
The Progress Made by Each Inventor.
50.—The M. Fourneaux Patent of 1871 with Perforated Card Board.
53.—The George W. Van Dusen Patent of 1867.
The Individual Key Secondary Striking Pneumatic Action.
55.—The Schmoele Brothers, William F. and Henry, Patent of 1873.
Three Inventors Exhibit at Philadelphia in 1876.
The Electric Organ of Henry Schmoelle.
57.—The Newman R. Marshman and Mason J. Matthews Patent of 1878.
The Pioneers in the Player Instrument Art.
George W. Van Dusen Abandoned the Work.
Elias P. Needham's Interest in the Player.
59.—The Misconception of the Fourneaux Patents.
Priority of American Inventors.
The Modern Player not Possible in 1876.
Improvements on the McTammany Player.

PAGE.

60.—Many Examine McTammany Player and Apply for Patents.
The Henry B. Horton Patent of 1878.

63.—The Modern Pneumatic Action and Its Development.
McTammany's Individual Pneumatics of 1866.
George W. Van Deusen Admits John McTammany Priority.
The Priority of the Perforated Music Sheet.

64.—The Search for Priority in Foreign Patent Offices.

65.—McTammany's First Manufacturing Competitors.

66.—Development of the Individual Pneumatic Action.
Affidavit of John McTammany in re Plunger versus Finger.

67.—Affidavit of James H. Salmon.
Affidavit of George Currier.

68.—Elias P. Needham's Son Visits McTammany Factory Incognito.

69.—Player Introduced Into Piano by McTammany in 1880.
McTammany Only Claimant to Player in 1876.

70.—McTammany Produced Full Fledged Player Piano in 1880.
McTammany Invented Modern Pneumatic Player Action in 1880.
The Merritt Gally Patent in 1884.

73.—The Double Primary Pneumatic Action.
Steinway Succumbs to Public Opinion.
Manufacturers Delay Progress.

74.—Opposition to "Mechanical Musicians."
McTammany had Breathed Life into Christofori's Piano.
The Cabinet Player Era and Its End.
Why the Double Primary, and Who Its Inventor.

75.—The Immortal Daniel Beatty and His Organ Stops.

76.—The Player Piano Versus the Piano Player.
The Manufacture of Mechanical Toy Reed Instruments.
The Organette and the Trumpetto.
Theodore P. Brown Starts Manufacture of Player Pianos in 1891.
The Reason for the Cabinet Player.

77.—The Player Piano Received a Setback.

78.—The Player and the Music Roll.
Need of Cooperation Between Roll and Player Manufacturers.
McTammany Invented Music Roll in 1876.
The First Music Roll Catalogue in 1877.
Orrin Ingalls. The First Music Roll Manufacturer.
The Music Roll Catalogue of 1886.

80.—The Musical Education of the Masses.

81.—First Agreement to Manufacture Music as Entered into by John McTammany and Orrin Ingalls in 1878.

82.—Air Engines or Motors.
Kinds of Air Engines.
The George B. Kelly Patent Air Engine.
The William D. Parker Patent Air Engine.
The Lucius T. Stanley Patent Air Engine.

PAGE.

83.—The Spring Motor.
Spring Motor Versus Wind Motor.
The John McTammany Patent Spring Motors.

85.—Theodore P. Brown Patent Winding Mechanism.
The Melville Clark Patent Winding Mechanism.
The John McTammany Tempo Adjuster of 1879.
Melville Clark's Achievement, The Apollo.
The Foot Pedal Mechanism.

86. The John McTammany Patent Foot Pedal Mechanism.
The E. S. Votey Patent Foot Pedal Mechanism.

87.—The Charles A. Needham Patent Foot Pedal Mechanism.

87.—Charles T. Sissons Gives John McTammany Credit for Player Invention.
Patent Office Sustains John McTammany.
Priority Claims on Music Roll and Foot Pedal Mechanism.
The C. A. Kuster Patent Foot Pedal Mechanism.

88.—The William D. Parker Patent Foot Pedal Mechanism.
The Paul B. Klugh Patent Foot Pedal Mechanism.
The Axel G. Gulbransen Patent Foot Pedal Mechanism.

89.—The Axel G. Gulbransen Patent of 1910.
The Paul B. Klugh Mechanism for Disposing and Concealing Foot Pedal Mechanism.
The Peter Welin Patent Foot Pedal Mechanism.

90.—The Alex. G. Gulbransen Foot Pedal Mechanism.

91.—Tracking.
The H. R. Moore Patent Tracker.
The John McTammany Wheel Tracker System.
James O'Connor, the Pioneer in Tracker Development.
Early Methods of Obviating Tracker Trouble.

92.—The Trial of James O'Connor, Inventor.
The James O'Connor Patent Tracker.
The Theodore P. Brown Patent Tracker.
The German System of Patent Interpretation.
The Nine Aperture Per Inch System Brings New Difficulties.

93.—The Robert A. Gally Patent Tracker.
The Joseph Courville and Francis W. Draper Patent Tracker.

95.—The Player's Weakness—the Perforated Music Roll.
The Thomas Danquard Patent Tracker.
Fault in the Function and the Construction of the Music Roll.
The George Howlett Davis Patent Winding Mechanism.

96.—The Problem Not Yet Satisfactorily Solved.
The Robert W. Pain Patent Tracker.
The James O'Connor Patent Tracker Specification.
Thomas Danquard and the Tracking Problem.

97.—The George B. Kelly Guiding and Tension Means.
Robert W. Pain and His Handling of the Crux.
The Robert W. Pain Patent Specifications.
George B. Kelly in Evidence on the Tracker Problem.
The George B. Kelly Patent Tracker.

PAGE.
98.—The James O'Connor Patent Web Guiding Device.
The George Howlett Davis Method of Building the Tracker.
99.—More Tracking Devices.
The Elihu Thompson Patent Tracker.
The Patent Office Does Not Issue Patents Solely on the Grounds of Simplicity, Compactness and Reduced Expense.
The James O'Connor Web Guiding Device and the Pending Lawsuit.
100.—The Theodore P. Brown Patent Tracker.
The Elihu Thompson System in Its Details.
101.—Other Attempted Solutions of the Tracker Bar Difficulties.
The Frank C. White Patent Tracker.
The Henry Price Ball Patent Tracker.
102.—The George P. Brand Patent Tracker.
The Harold Binney Patent Tracker for Legato.
103.—Melville Clark, the Pioneer.
The Melville Clark Patent Tracker.
Melville Clark Helped Win Player Victory.
The Eighty-eight Scale of 1901.
From the Eight Scale of the Toy Trumpettos to the Eighty-eight Scale Player Piano of To-day.
Extension of the Scale and Its Import to the Makers.
Melville Clark Increased Scale to Eighty-eight Notes.
104.—Marc A. Blumenberg and the 88-Note Player.
The Louis H. Maier Patent Tracker.
The Joseph Wieser Patent Duplex Tracker.
McTammany Opposed 88-Note Player at the Time of Its Introduction.
Eighty-eight Notes Brought Trials in Their Wake.
Introduction of 88-Note Player Makes Epoch.
105.—The Frank C. White and George W. Haywood Patent Tracker Mechanism.
106.—The Melville Clark Patent Trackers and Specifications.
The Specifications of the Joseph Wieser Patent.
The Specifications of the Frank C. White Patent Tracker.

PAGE.
107.—Feeding, Guiding and Winding.
The Impending Feeding and Winding Improvements.
The Theodore P. Brown Patent Feeders.
109.—The Tracker Bar.
The Christian Maerton Patent Tracker Bar Mechanism.
110.—The Theodore P. Brown Patent Tracker Bar Mechanism.
The James O'Connor Patent Tracker Bar Mechanism.
The Melville Clark Patent Duplex Tracker.
112.—The Player and Musical Expression.
The John McTammany Expression Control of 1876.
The W. D. Moses (W. M. Davis) Expression Patent.
113.—The W. M. Davis Patent Specifications.
The Welte-Mignon Expression Achieved of 1904.
Expression Always Player's Greatest Problem.
114.—The Edwin Welte and Karl Bockisch Expression Patent.
Marc A. Blumenberg on the Welte-Mignon.
115.—The Robert Fromdorf Tone Modulating Device.
The George H. Bent Tempo Indicator.
116.—The Louis H. Maier Expression Patent.
117.—The Walter M. Davis and Justus Hattemer Electric Accenting Device.
"Three Hundred Years from Now There Will Be No Such Thing as Playing the Piano by Hand."—Leschetizky.
118.—The Frank C. White Expression Bar.
The Peter Welin Automatic Modulating Mechanism.
119.—The Orin J. Fairbanks Patent Expression Mechanism.
The Albert Krell and Peter Welin Patent Tone-Softening Service.
120.—The Frederick Grundy Patent Expression Controller.
121.—Specifications for the Grundy Expression Controller.
Specifications for the Fairchild Expression Mechanism.
122.—Appendix—The Justinian Morse Specifications.
A Stupendous Task.
General Index by Subjects.
Index by Names of Persons.

GENERAL INDEX BY SUBJECTS

PAGE.

Abandonment of Work. By Marshman..... 57
Abandonment of Work. By Van Dusen..... 57
Accenting Device. Davis-Hattemer.....117
Achievements of the Player VI
Action, Double Primary, Its Inventor..... 74
Action, Double Primary, Pneumatic..... 73
Action, Modern Pneumatic Player, Its Invention..... 70
Action, Pneumatic, Individual, Development of..... 66
Action, Pneumatic, Its Development..... 63
Admission of McTammany Priority. By Van Dusen.. 63
Advertising Circular of First Players..... 35
Aerial Piano..... 84
Agreement to Manufacture Music Rolls..... 81
Affidavit. Frank A. Beane..... 37
Affidavit. George Currier.....35, 67
Affidavit. Walter G. Ingalls..... 35
Affidavit. John McTammany.....38, 66
Affidavit. James H. Salmon.....35, 67
Affidavit. Clarence E. Steere..... 35
Affidavit. Daniel A. Tourtellotte..... 38
Affidavit. L. A. Wernery..... 44
Air Engines or Motors, Kinds of..... 82
Air Engine Priority..... 83
Air Engine, Reciprocating, Priority..... 83
Air Engine, Kelly..... 82
Air Engine, Parker..... 82
Air Engine, Stanley..... 82
America Becomes Interested..... 21
American Inventor's Priority..... 59
Angelus 114
Aperture, System of 9 to Inch Brings New Difficulties 92
Apollo 85
Appendix—Morse Specifications.....122
Applications for Patents by Those Who Examined McTammany Player..... 60
Attachment Players..... 33
Autophones 6
Autopiano 114
Bain Patent.....1847
Ball Tracker.....101
Beatty, Daniel, the Immortal..... 75
Bellows, Carhart..... 13
Bent Tempo Indicator.....115
Binney Tracker for Legato.....102
Birth of the Player Industry..... IV
Birthplace of McTammany.....VII
Blumenberg and the 88-Note Player.....104
Blumenberg on the Welte-Mignon.....114

PAGE.

Bockisch-Welte Expression.....114
Brand Tracker.....102
Brown Feeders.....107
Brown Start—Manufacture of Player Pianos..... 76
Brown Tracker.....92, 100
Brown Tracker Bar.....110
Brown Winding Mechanism..... 85
Building Up the Early Player Industry..... 44
Cabinet Player Era and Its End..... 74
Cabinet Player, Reason for..... 76
Carhart Suction Bellows..... 13
Catalogues of Music Rolls in 1877 and 1886..... 78
Cause of Delay in Securing McTammany Patent..... 34
Chicago Post, Quotation from..... 1
Cristofori's Piano, Life Breathed Therein by McTammany 74
Claimants to Player in 1876..... 69
Clark's Achievement, the Apollo..... 85
Clark Helped Win Player Victory.....103
Clark Increased Scale from 65 to 88 Notes.....103
Clark the Pioneer.....103
Clark Tracker.....103, 106
Clark Tracker Bar, Duplex.....110
Clark Winding Mechanism..... 85
Compactness of Construction Not Patentable..... 99
Comparison of the First and the Modern Player Action 34
Competition, First Encountered by McTammany..... 65
Conception of the Player..... V
Construction Principles of Simplicity, Compactness and Reduced Expense Not Patentable..... 99
Cooperation Between Roll and Player Manufacturers Needed 78
Courier Affidavit..... 67
Courville-Draper Tracker..... 93
Crude First Player..... 33
Crux, Pain and His Handling of the..... 97
Daniel Beatty the Immortal..... 75
Danquard and the Tracker Problem..... 96
Danquard Tracker.....95, 96
Davis Expression Device.....112
Davis-Hattemer Electric Accenting Device.....117
Davis Tracker..... 98
Davis Winding Mechanism..... 95
Dawson Patent, 1848..... 14
Decision of Commissioner of Patents..... 31
Definition of the Player.....29, III
Delay of Progress Due to Manufacturers..... 73
Delay in Securing McTammany Patent..... 34

PAGE.
Development of Individual Pneumatic Action..... 66
Development of the Modern Pneumatic Action..... 63
Development of Tracker, O'Conner the Pioneer..... 91
Direct System of Operation..... 12
Double Primary Pneumatic Action..... 73
Double Primary, Its Inventor..... 74
Draper-Courville Tracker..... 93
Early Methods in Tracker Development..... 91
Early Player Industry..... 44
Economy of Expense Not Patentable..... 99
Education of the Masses in Music..... 80
Eighty-eight Note Scale.....103
Eight Notes of Toy Trumpettos to Eighty-eight Notes of Player Piano of Today.....103
Electric Organ of Schmole Brothers..... 55
Elegy in a Country Churchyard..... 95
Elements of a Player..... 30
Elements of the Player, Definition.....III
Elements of Seytre Patent..... 9
End of Cabinet Player Era..... 74
Engines, Air, Kinds of. See Air Engine..... 82
"Eriol" Piano..... 76
Evidence on the Tracker Problem. Kelly..... 97
Examiners of McTammany Player Later Apply for Patents 60
Exposition at Philadelphia in 1876..... 55
Expression of Appreciation of Other Workers. By McTammany 33
Expression Control..... 26
Expression Device, Davis.....112
Expression Device, Davis-Hattemer, Electric Accentor 117
Expression Device, Fairbanks.....119, 121
Expression Device. Fromdorf.....115
Expression Device, Grundy, Controller.....120
Expression Device, Krell-Welin, Tone Softener.....119
Expression Device. Maier.....116
Expression Device. Moses.....112
Expression Device, Welin, Automatic Modulator.....118
Expression Device. Welte-Bockisch.....114
Expression Device, White, Expression Box.....118
Expression of Music on the Player, McTammany 1876..112
Expression, Player's Greatest Problem.....113
Expression, Welte-Mignon Achievement.....113
Extension of the Scale.....103
Fairbanks Expression Mechanism.....119, 121
Father of Player Industry..... 29
Fault in Function and Construction of Music Roll..... 95
Feeder. Brown.....107
Feeding, Guiding and Winding.....107
Feeding Mechanism, Improvements Impending.....107
Fetishes Not Respected.....VII
Finger Mechanism..... 25
First Air Engine 1876..... 83
First Agreement to Manufacture Music Rolls..... 81
First Attachment Players..... 33
First Competition in Manufacture of Player..... 65
First Double Primary Action..... 74
First 88-Note Scale Player Piano.....103
First Foot Pedal Mechanism of McTammany..... 86
First Full Fledged Player..... V
First Modern Pneumatic Player Action..... 70

PAGE.
First Music Roll Catalogue in 1877..... 78
First Music Roll Invented in 1876..... 78
First Music Roll Manufacturer..... 78
First Perforated Paper Musical Instrument..... 29
First Perforated Paper Record..... 5
First Player Advertising Circular..... 35
First Player Crude Affair..... 33
First Player Exhibited.....VI
First Player Piano Invented by McTammany in 1880.. 70
First Player Piano Manufacturer..... 76
First Practical Primary Action..... 34
First Spring Motor..... 84
First Steps Towards Invention..... V
First Tempo Adjuster, McTammany 1879..... 85
First Reciprocating Air Engine, 1880..... 83
Foot Pedal Mechanism..... 90
Foot Pedal Mechanism. Gulbransen.....88, 89
Foot Pedal Mechanism. Klugh.....88, 89
Foot Pedal Mechanism. Kuster..... 87
Foot Pedal Mechanism. McTammany..... 86
Foot Pedal Mechanism, McTammany Priority Sustained by Patent Office..... 87
Foot Pedal Mechanism. Needham.....85, 87
Foot Pedal Mechanism. Parker..... 88
Foot Pedal Mechanism. Voley..... 86
Foot Pedal Mechanism. Welin..... 89
Foreign Patent Offices Searched for Priority..... 64
Fourneaux Patent, Misconception of..... 59
Fraudulent Drawing of Bain..... 12
French "Pianista"..... 55
Fromdorf Tone Modulating Device.....115
Gally Patent, 1884..... 70
Gally Tracker..... 93
German System of Patent Interpretation..... 92
Graces, Definition of Webster's..... 3
Growth of the Player Industry.....IV
Grundy Expression Controller.....120
Guiding and Tension Means. Kelly..... 97
Guiding, Winding and Feeding.....107
Gulbransen Foot Pedal Mechanism.....88, 89, 90
Hallet & Cumston Square Piano Pneumatic Action.... 70
Hattemer-Davis Electric Accenting Device.....117
Haywood & White Tracker.....105
Horton Patent, 1876..... 60
Hunt & Bradish Patent, 1849..... 22
Immortal Daniel Beatty..... 75
Impending Law Suit Re O'Connor Web Guiding Device 99
Impossibility of Modern Player in 1876..... 59
Impracticable Patents..... 26
Improvements Impending in Feeding and Winding Mechanism 107
Improvements on the Original Player.....59, VI
Increase of Scale from 65 to 88 Note Due to Melville Clark 103
Individual Key Secondary Striking Pneumatic..... 53
Individual Pneumatics, 1866..... 63
Individual Pneumatic Action, Development of..... 66
Interpretation of Patents, German System..... 92
Intervening Mechanism..... 23
Inventions Exhibited at Philadelphia in 1876..... 55
Invention of the Air Engine..... 83

PAGE.

Inventor of the Double Primary Action..... 74
Inventor of the Player.....29, V
Invention of Player, Charles T. Sissons Gives McTammany Credit..... 87
Invention of Modern Pneumatic Player Action..... 70
Invention of the Music Roll in 1876..... 78
Invention of the Music Roll and Foot Pedal Mechanism Accredited to McTammany by Patent Office..... 87
Invention of Reciprocating Air Engine..... 83
Invention of the Sliding Valve System..... 83
Invention of the Spring Motor.....31, 84
Invention of the Wind Motor..... 31
Justice Blatchford on Abandoning Inventions..... 29
Kelly Air Engine..... 82
Kelly in Evidence on the Tracker Problem..... 97
Kelly Guiding and Tension Means..... 97
Kelly Patent Tracker..... 97
Kelly's Sliding Valve System..... 83
Kinds of Air Engines..... 82
Kingsbury Inner Player.....114
Klugh Foot Pedal Mechanism..... 88
Klugh Foot Pedal Mechanism for Concealing Same.... 89
Krell Autogrand.....114
Krell-Welin Tone-Softening Device.....119
Kuster Foot Pedal Mechanism..... 87
Law Suit Impending, O'Conner Web Guiding Device.. 99
Leschetizky's Prediction.....VI, 117
Life Breathed Into Cristofori's Piano by McTammany 74
McTammany Affidavit..... 66
McTammany Air Engine of 1876..... 83
McTammany's Birthplace.....VII
McTammany Expression Control of 1876 112
McTammany's First Manufacturing Competitor..... 65
McTammany Foot Pedal Mechanism..... 86
McTammany Full Fledged Player of 1880..... 70
McTammany Had Breathed Life Into Christofori's Piano 74
McTammany Individual Pneumatics of 1866..... 63
McTammany Only Claimant to Player in 1876..... 69
McTammany Opposed 88-Note Player at the Time It Appeared 104
McTammany Patent, 1883..... 31
McTammany Priority of 1866..... 31
McTammany Priority Admitted by Van Dusen..... 63
McTammany Modern Pneumatic Player Action of 1880 76
McTammany Moves Factory..... 35
McTammany Music Roll of 1876..... 78
McTammany Reciprocating Air Engine in 1880..... 83
McTammany Spring Motor..... 84
McTammany Sustained by Patent Office in Priority Claim on Music Roll and Foot Pedal Mechanism.... 87
McTammany Tempo Adjuster..... 85
McTammany Wheel Tracker System..... 91
Maerten Tracker Bar.....109
Maier Expression Device.....116
Maier Tracker.....104
Manufacturers Delay Progress..... 73
Manufacture of Mechanical Toy Reed Instruments.... 76
Manufacturer of Music Rolls..... 78
Manufacture of Music Rolls, First Agreement..... 81

PAGE.

Manufacturer of Player Pianos, First..... 76
Manufacturing, First Competition to McTammany.... 65
Marshman Abandons Work..... 57
Masses Educated in Music..... 80, VI
Masters to Masses.....80, VI
Mechanical Musician Opposed..... 74
Mechanical Toy Reed Instruments, Manufacture of.... 76
Melodant 114
Miracle of the Player.....VII
Misconception of the Fourneaux Patent..... 59
Misrepresentations 1
Modern Player Not Possible in 1876..... 59
Modern Pneumatic Action and Its Development..... 63
Modern Pneumatic Player Action, Its Invention..... 70
Monroe Orchestrone Organ with McTammany Pneumatic Action..... 43
Monroe Organ Reed Company Agreement..... 42
Moore Tracker..... 91
Morse Specifications.....2, 122
Moses Expression Device.....112
Motor. See Air Engine..... 82
Motors, Air, Kinds of. See Wind Motors.....82, 84
Motor, Spring, Kinds of. See Spring Motor..... 84
Munroe Organ..... 38
Munroe Organ with McTammany Pneumatic Action .. 41
Musical Education of the Masses..... 80
Musical Expression and the Player, McTammany, 1876.112
Music Roll and the Player..... 78
Music Roll Catalogue in 1877 and 1886..... 78
Music Roll, Fault in Function and Construction..... 95
Music Roll Invented in 1876..... 78
Music Roll Manufacturer, First..... 78
Music Roll Manufacturer, First Agreement..... 81
Music Roll Priority..... 63
Music Roll Priority, McTammany Sustained by Patent Office 87
Music Roll, the Weakness of the Player..... 95
Nationality of Player Invention..... 2
Needham Foot Pedal Mechanism..... 87
Needham's Interest in the Player..... 57
Needham's Son Visits McTammany Factory Incognito.. 68
Need of Cooperation Between Roll and Player Manufacturers 78
Nine Aperture System Brings New Difficulties..... 92
Notes in Scale and Extension from 8 to 88.....103
O'Connor a Pioneer in Tracker Development..... 91
O'Connor Tracker.....91, 92, 96
O'Connor Tracker Bar.....110
O'Connor, Trials of..... 92
O'Connor Web Guiding Device..... 98
O'Connor Web Guiding Device, Impending Law Suit.. 99
Opposition to "Mechanical Musician"..... 74
Organette and Trumpetto..... 76
Organ, Electric, Schmoele's..... 55
Organ, Monroe..... 41
Organ, Taylor and Farley..... 42
Organ, Taber..... 43
Original Player Improved..... 59
Parker Air Engine..... 82
Parker Foot Pedal Mechanism..... 88
Pain and His Handling of the Crux..... 97

PAGE.
Patent Interpretation, German System 92
Patent Office Does Not Issue Patents Solely on the Grounds of Simplicity, Compactness and Reduced Expense 99
Pain, Patent 97
Pain Tracker 96
Patents, Value of 43
Patent, Bain, 1847 10
Patent, Ball 101
Patent, Bent 115
Patent, Binney 102
Patent, Brand 102
Patent, Brown 85, 92, 100, 107, 110
Patent, Carhart Bellows 14
Patent, Clark 85, 103, 106, 110
Patent, Courville-Draper Tracker 93
Patent, Danquard 95, 96
Patent, Davis 95, 98
Patent, Davis-Hattemer 117
Patent, Davis-Moses 112
Patent, Dawson, 1848 14
Patent, Draper-Courville Tracker 93
Patent, Expression, Automatic Modulator, Welin 118
Patent, Fromdorf 115
Patent, Fairchilds 119, 121
Patent, Gally 70, 93
Patent, Grundy 120
Patent, Gulbransen 88, 89, 90
Patent, Haywood & White 105
Patent, Hattemer-Davis 117
Patent, Horton 60
Patent, Hunt & Bradish 22
Patent, Kelly 97
Patent, Klugh 88, 89
Patent, Krell-Welin 119
Patent, Kuster 87
Patent, Maerten 109
Patent, Maier 104, 116
Patent, McTammany, Priority of 1866 31
Patent, McTammany, 1883 31
Patent, McTammany 91
Patent, Moore 91
Patent, Moses-Davis 112
Patent, Morse, 1731 ..... 2, 122
Patent, O'Connor 91, 92, 96, 98, 110
Patent, Paur 96, 97
Patent, Parker 88
Patent, Pope, 1851 26
Patent, Seytre, 1842 5
Patent, Thompson 99
Patent, Welin 89, 119
Patent, Welte-Mignon 113
Patent, White 101, 118
Patent, White & Haywood 105
Patent, Wieser 104
Perforated Board Music 2
Perforated Paper, Fourneaux Patent of 1871 50
Perforated Sheet Instrument, Fourneaux's Not 49
Philadelphia Exposition 55
"Pianista" French 55
Pianista, Pneumatic 46

PAGE.
Pianola 114
Pianos and Their Makers 1
Piano Player vs. Player Piano 76
Pin Cylinder, Fourneaux Patent of 1863 45
Pioneer in 88-Note Player Scale was Melville Clark 103
Pioneers in Player Industry 57
Pioneer in Tracker Development, O'Connor 91
Pioneer Melville Clark 103
Player Action, Modern Pneumatic, Its Invention 70
Player Cabinet, Reason for 76
Player Claimants in 1876 69
Player Definition III
Player Elements Definition III
Player Pianos First Manufactured 76
Player's Greatest Problem—Expression 113
Player Improved 59
Player Introduced Into Piano by McTammany 69
Player, Inventions of, Charles T. Sissons Gives McTammany Credit 87
Player Piano Invented by McTammany in 1880 70
Player and Musical Expression 112
Player and the Music Roll 78
Player Piano Priority, McTammany, 1880 69
Player Piano vs. Piano Player 76
Player Piano Receives a Set Back 77
Player Piano, Scale of 103
Player Piano Scale, Blumenberg on Increase of 104
Player and Roll Manufacturers Need Cooperation 78
Player Victory Largely Won by Melville Clark 103
Player's Weakness the Music Roll 95
Pneumatics 53
Pneumatic Action and its Development 63
Pneumatic Action, Development of Individual 66
Pneumatic Action, Primary, Double 73
Pneumatics, Individual, McTammany, 1866 63
Pneumatic Pianista 46
Pneumatic Player Action, Modern, Its Invention 70
Pneumatics in Use 42
Prediction of Leschetizky 117
Primary, Double, Its Inventor 74
Primary Pneumatic Action, Double 73
Primary and Secondary Pneumatics in Use 42
Priority of Air Engine 83
Priority of American Inventors 59
Priority of Double Primary Action 74
Priority of McTammany 31
Priority of McTammany Invention of Music Roll and Foot Pedal Mechanism Sustained by Patent Office 87
Priority of McTammany Admitted by Van Dusen 63
Priority of the Music Roll of 1876 78
Priority of Player Piano 69
Priority of Perforated Music Sheet 63
Priority of Reciprocating Air Engine 83
Priority Search in Foreign Patent Offices 64
Priority of Sliding Value System 83
Priority of Modern Pneumatic Player Action in 1880 70
Problem Not Yet Satisfactorily Solved 96
Progress Delayed by Manufacturers 73
Progress Made by Each Inventor 49
Progress of Last Ten Years VII

PAGE.

Purpose of This Book 1
Quotation. Appleton's Encyclopedia, 1885, Re Seytre Patent 5, 6
Quotation. Chicago Post 1
Quotation. Decision of Patent Office Awarding Priority of Player Invention to McTammany 3
Quotation. Justice Blatchford, Abandoned Inventions .. 29
Quotation. Leschetizky ..... 117, VI
Quotation. St. Louis Journal, McTammany First Player 29
Quotation. Shakespeare 1
Quotation. Webster 3
Reason for Cabinet Player 76
Reciprocating Air Engine 83
Reed Instruments, Manufacture of Mechanical Toys .. 76
Roll and Player Manufacturers Need Cooperation 78
Salmon Affidavit 67
Scale, Blumenberg on Increase to 88 Notes on Player .. 104
Scale, Eighty-eight Note, 1901 103
Scale of 88 Notes Brought Trials In Its Wake 104
Scale, Extension of 103
Scale, Growth from Eight Notes of Trumpetto to 88 Notes of Piano of Today 103
Scale Increased from 65 to 88 Notes by Melville Clark. 103
Scale of 88 Notes Marks Epoch in Development of the Player 104
Search for Priority in Foreign Patent Office 64
Secondary Striking Pneumatic 53
Shakespeare, Quotation from 1
Simplicity of Construction Not Patentable 99
Sissons Gives McTammany Credit for Player Invention 87
Sliding Valve System 83
Solo-aid 114
Specifications of Clark Tracker Mechanism 106
Specifications of Danquard Tracker 96
Specifications of Davis-Moses Expression Device 113
Specifications of the Fairchilds Expression Mechanism. 121
Specification, Justinian Morse, 1731 ..... 2, 122
Specifications of Moses-Davis Expression Device 113
Specifications of O'Connor Tracker Patent 96
Specifications of the White Tracker Mechanism 106
Specifications of the Wieser Tracker Mechanism 106
Spring Motor 31, 84
Spring Motor Invention 84
Spring Motor versus Wind Motor 84
Square Piano (Hallett & Cumston) Pneumatic Action 70
Stanley Air Engine 82
Steinway Succumbs to Public Opinion 73
Stricture on Patent and Other Law 43
Striking Pneumatic 53
Summary of Progress of Player Industry 32
Taber Organ with McTammany Pneumatic Action 43
Taylor & Farley Organ with McTammany Pneumatic Action 42
Tempo Adjuster, McTammany 85
Tempo Indicator, Bent 115
Themodist 114
Thompson Tracker 99
Thompson Tracker System in its Details 100
Tone Modulating Device, Fromdorf 115
Tone-Softening Device, Krell-Welin 119
Tracking 91

PAGE.

Tracker Bar 109
Tracker, Ball 101
Tracker, Brand 102
Tracker, Brown 92, 100
Tracker Bar, Brown 110
Tracker Bar, Duplex, Clark 110
Tracker Bar, Maerten 109
Tracker Bar, O'Connor 110
Tracker, Clark 103, 106
Tracker, Courville-Draper 93
Tracker, Davis 98
Tracker, Danquard 95, 96
Tracker Development, O'Connor the Pioneer 91
Tracking Devices 99
Tracker Gally 93
Tracker, Haywood & White 105
Tracker, Kelly 97
Tracker for Legato, Binney 102
Tracker, Maier 104
Tracker, H. R. Moore 91
Tracker, O'Connor 91, 92, 96
Tracker, Other Attempted Solutions 101
Tracker, Pain 96
Tracker Problem, Kelly in Evidence 97
Tracker Problem and Danquard 96
Tracker System, McTammany 91
Tracker System of Thompson in Its Details 100
Tracker, Thompson 99, 100
Tracker Troubles, Early Methods 91
Tracker, White 101
Tracker, White & Haywood 105
Tracker, Wieser, Duplex 104
Trials of James O'Connor 92
Trumpetto and Organet 76
Trumpetto, Scale of 103
Value of Patents and Other Law 43
Van Dusen Abandons Work 57
Van Dusen Admits McTammany Priority 63
Voley Foot Pedal Mechanism 86
Weakness of Player, the Music Roll 95
Web Guiding Device, O'Connor 98
Web Guiding Device, O'Connor, Impending Law Suit .. 99
Welin Expression Device, Automatic Modulator 118
Welin Foot Pedal Mechanism 89
Welin-Krell Tone Softening Device 119
Welte-Bockisch Expression 114
Welte-Mignon, Expression Achievement of 1904 .. 113, 114
Welte-Mignon, Marc Blumenberg's Statement Thereon. 114
White Expression Box 118
White & Haywood Tracker 105
White Tracker 101
Why the Double Primary and Who Its Inventor 74
Wieser Tracker Duplex 104
Wind Motor Invention 31
Wind Motor versus Spring Motor 84
Winding, Feeding and Guiding 107
Winding Mechanism 85
Winding Mechanism, Brown 85
Winding Mechanism, Clark 85
Winding Mechanism, Davis 95
Winding Mechanism Improvements, Impending 107

INDEX BY NAMES OF PERSONS

PAGE.

Aeolian Co., formerly Mechanical Orguinette Co...65, 95
Appleton, D., & Co.....5, 6, 12, 55
Arno, A. H. 34
Autopiano Co. 107
Babcock, Alpheus 33
Bach, Johann Sebastian 117
Bain, Alexander 2, 6, 9, 10, 12, 13, 14, 21, 23, 26, 29, 32, 49, 50, 57, 64, 122
Ball, Henry Price 101
Beane, Frank A. 37, 38
Beatty, Daniel F. 75
Beethoven, Ludwig van.....117
Behning, Henry 74
Bell, Alexander G.....VII, 69
Bennett, W. W. See Chinnock, G. H.....112, 113
Bent, G. H. 114, 115
Binney, Harold 102
Blatchford, Justice 29
Blumenberg, Marc A.....95, 104, 113, 114
Bockisch, Karl 114
Bradish, J. S.....2, 13, 21, 22, 23, 24, 25, 26, 29, 31, 32, 34, 49, 50, 57, 64
Brahms, Johannes 117
Brand, Geo. P. 101, 102
Bridgeport Brass Co. 63
Briggs, L. A. 81
Briggs Piano Co. 35, 67
Broadwood, John .....V, 33
Brown, Albert W. 54
Brown, Edwin H. 112
Brown & Simpson 74
Brown, Theodore P.....35, 74, 76, 77, 84, 85, 92, 93, 96, 100, 107, 108, 110, 111
Byron, N. 75
Cambridge Chronicle..... 81
Camp, Isaac..... 29
Carhart, J.....12, 13
Caulfield, J. P..... 73
Chase, J. H..... 34
Chickering, Jonas.....V, VI, 33, 74
Chinnock, G. H.....112, 113
Clark, Melville.....84, 85, 103, 104, 105, 106, 109, 110
Clobridge, Jno..... 23
Courville, Joseph..... 93
Cristofori, Bartolomo.....V, VI, VIII, 4, 33, 74, 103

PAGE.

Currier, George.....35, 66, 67
Curtis, Fred.....31, 42
Curtis, Louis A..... 42
Danquard, Thomas.....95, 96
Davis, G. Howlett.....66, 95, 97
Davis-Hattemer Electric Accenting Machine.....117
Davis, W. M.....112, 113, 114, 116
Dawson, Charles.....2, 13, 14, 21, 23, 26, 29, 32, 49, 50
Day, Chs. G. 62
Dickens, Chas..... IV
Dolge, Alfred.....1, 2, 3, 4, 5, 49
Draper, Francis W..... 93
Dyer, John Lathrop.....35, 67, 68
Edison, Thos. A.....VII
Erard, Sebastian.....V, 4
Estey, J., & Co.....29, 30, 31, 34, 44, 60
Eyre, George Edward.....12, 21
Fairchild, Oren J.....117, 119, 121
Fourneaux, M....V, 2, 23, 25, 26, 34, 45, 49, 50, 53, 59, 63, 64, 77
Fowler, Azro.....25, 34, 64, 66, 67, 68, 69, 70, 74, 76
Frömsdorf, Robert.....114, 115
Fuller, Charles E.....35, 36, 37, 38
Fuller, Col. L. K.....44, 60
Fulton, Robt..... 29
Gally, Meritt..2, 23, 25, 26, 53, 65, 66, 68, 69, 70, 71, 74, 76, 77, 87, 94, 112, 113
Gally, Robert A 93, 96
George Washington University.....112
Geppert, William..... IX
Gould, J. M..... 81
Gray, Thomas (Poet)..... 95
Greene, Joseph K.....35, 36, 38
Grundy, Frederick.....117, 121
Gulbransen, Alex. G.....88, 89, 90
Gutenberg VIII
Hallet & Cumston.....70, 76
Harris, Moses..... 58
Hattemer, J.....114
Hawkins, John Isaac..... 33
Haywood, Geo. W.....105, 106
Heinze, Gustav Adolph.....113
Hitchcock 29
Horton, Henry B.....31, 57, 60, 62, 64, 69
Howe, Elias, Jr..... 29
Hunnewell, F.....42

PAGE.

Hunt, A. F. 2, 13, 21, 22, 23, 24, 25, 26, 29, 31, 32, 34, 49, 50, 57, 64
Ingalls, Orrin 78, 81
Ingalls, Walter G. 35
Ingalls & Co., G. W. 35, 37, 38, 43
Ives, Selden 23
Jacquard 1, 4, 6, 27, 45, 49, 50, 51
Kaempffert, Waldemar 113
Kelly, Geo. B. 35, 67, 82, 83, 97
Klugh, Paul Brown 88, 89
Knabe & Co., Wm. 74
Krell, Albert 114, 117, 120
Kroeger Piano Co. 87
Kuss, William 4
Kuster, C. A. 87
Lamy, Thibouville 26, 55
Lansing, I. J. 107
Leschetizky, Theodor ..... VII, 117
Lowmiller, Alpheus 31, 63
McCormick 29
McNamara, Wm. F. 54
McTammany, Alexander 39
McTammany, John ..... III, IV, V, VI, VII, VIII, IX, 1, 23, 25, 26, 29, 31, 32, 34, 35, 36, 37, 38, 39, 40, 42, 44, 50, 53, 57, 59, 60, 62, 63, 64, 65, 66, 67, 68, 69, 70, 73, 77, 78, 79, 80, 81, 82, 83, 84, 85, 86, 87, 91, 92, 112, 122
McTammany Organette Co. 80
Maertens, Christian 109
Maier, Louis H. 114, 116
Marconi, Guglielmo VII
Marshman, Newman R. 31, 57, 58, 63, 69
Marshman, R. P. 58
Mason & Hamlin 77
Matthews, Mason J. 26, 31, 34, 57, 58, 64, 69
Mechanical Orguinette Co., now Aeolian Co. 65
Mergenthaler, Ottmar 107
Miller, B. 63
Miller, M. A. 31
Moore, Hartwell R. 91, 94, 96
Morse, Justinian. 1, 2, 3, 4, 5, 6, 13, 21, 23, 26, 29, 32, 50, 64
Munroe Co., The 38, 42, 43, 44, 65
Munroe Organ Reed Co. 42, 43
Musical Courier Extra 63, 95, 104
Needham, C. A. 68, 87
Needham, Dr. Chas. W. 112
Needham, Elias P. 12, 26, 31, 57, 60, 63, 64, 65, 66, 68, 69, 70, 74, 76, 87
Needham, O. H. 66, 68
O'Connor, James 91, 92, 94, 96, 97, 99, 100, 107, 110, 111
Paderewski, I. J. 3
Pain, Robert W. 96, 97
Pape, M. 2, 23, 26, 27, 49, 50, 53, 64, 77
Parker, William D. 35, 37, 38, 42, 43, 70, 77, 82, 83, 87

PAGE.

Rice, Fenelon B. 37, 38
Salmon, James H. 35, 66, 67, 68
Sampson, G. V. 81
Schmoele Bros., Henry and Wm. Ford 55, 56, 57, 66, 68
Schmoele, Charles 55, 56
Schmoele, Henry 55, 56, 57, 64
Schmoele, Wm. Ford 55, 56, 57, 64
Scientific American 113
Severance Action Co. 35, 67
Seytre 2, 5, 6, 9, 10, 13, 23, 25, 26, 29, 32, 49, 50, 53, 64, 122
Shakespeare, William 1
Sholes 29
Silbermann, Gottfried ..... V, 33
Sissons, Charles T. 87
Smith, J. A. 66
Smith, Roswell T. 66
Spottiswoode, William 12, 21
Stanley, Lucius T. 82
Steere, Clarence E. 35, 36
Steinway & Sons 73, 74
Stevenson, George 29, 33
Story & Camp ..... V, 29
Straub, A. 60
Taber Organ Co. 35, 37, 38, 42, 68, 70, 76
Taylor & Farley Organ Co. 35, 37, 38, 42, 68, 70, 76
Thomson, Elihu 99, 100
Totten, Wm. J. 62
Tourtellotte, Daniel A. 38
Tremaine, W. B. 29
U. S. Patent Office 78
Vaucanson 1, 4
Van Dusen, George W. 2, 25, 31, 32, 34, 50, 53, 57, 63, 64, 66, 67, 68
Verne, Jules 2
Victoria, Queen 10, 14
Votey, E. S. 86
Wanamaker, John 95
Waterbury, William F. 39, 44
Watt, James 29, 95
Webster, Daniel 2, 3, 69, 70
Welin, Peter 88, 117, 118, 119, 120
Welte, Edwin 114
Welte-Mignon 21
Wernery, L. A. 44
Whigelt, George VII
White, Frank C. 101, 104, 106, 117, 118
White & Haywood 105
Whitney, Eli 4
Wieser, Joseph 106
Wilcox & White 95
Wright, M. S. 35, 88, 96
Wright Co., M. S. 38

TABLE OF PLAYER AND PLAYER IMPROVEMENT PATENTS CHRONOLOGICALLY ARRANGED ACCORDING TO DATES OF ISSUE

If Mentioned in Text of Book, Page Number Is Given

1	English	Patent to Justinian Morse	527	Apl.	13,	1731
2	French	" " Claude Felix Seytre	8,691	Jan.	24,	1842
3	English	" " Alexander Bain	11,886	Oct.	7,	1847
4	English	" " Charles Dawson	12,307	Nov.	2,	1848
5	American	" " A. F. Hunt and J. S. Bradish	6,006	Jan.	9,	1849
6	English	" " M. Pape	7,649	Oct.	6,	1851
7	French	" " M. Fourneaux	60,702	Nov.	4,	1863
8	American	Priority of John McTammany established before Commissioner of Patents	.....	.....		1866
9	American	Patent to George W. Van Dusen	72,129	Dec.	10,	1867
10	French	" " M. Fourneaux (Reissue)	60,702	Aug.	9,	1871
11	American	" " Schmoele Brothers	145,532	Dec.	16,	1873
12	"	Caveat to John McTammany	Caveat	Sept.	6,	1876
13	"	Patent to Merritt Gally	203,257	May	7,	1878
14	"	" " Marsham & Mathews	207,492	Oct.	29,	1878
15	"	" " Henry B. Horton	210,424	Dec.	3,	1878
16	"	" " O. H. Needham	213,442	Mch.	18,	1879
17	"	" " W. W. Bennet and George H. Chinnock	226,279	Apl,	6,	1880
18	"	" " Azro Fowler	231,786	Aug.	31,	1880
19	"	" " E. P. Needham and Azro Fowler	238,145	Feb.	21,	1881
20	"	" " Merritt Gally	351,171	Oct.	19,	1886
21	"	" " Merritt Gally	351,172	Oct.	19,	1886
22	"	" " John McTammany	390,386	Oct.	2,	1888
23	"	" " John McTammany	391,328	Oct.	2,	1888
24	"	" " John McTammany	400,102	Mch.	26,	1889

Patents of 1883

Perforating Machines	R. T. Smith	No. 287,062	Oct.	23
Music Roll	H. Schmoele	No. 272,090	Feb.	13
Music Sheet—Mechanical	J. Bailey	No. 286,108	Oct.	2
Musical Instrument—Automatic	J. McTammany	No. 290,697	Dec.	25
Musical Instrument—Mechanical	O. H. Arno (Reissue)	No. 10,279	Dec.	18
" " "	E. H. Brown	No. 278,771	June	5
" " "	A. Durkee	No. 282,179	July	31
" " "	P. Ehrlich	No. 290,672	Dec.	25
" " "	M. Gally	No. 279,933	June	26
" " "	"	No. 282,877	Aug.	7
" " "	A. H. Hammond	No.277,129	May	8
" " "	"	No. 284,844	Sept.	11
" " "	J. Lacape	No. 272,269	Feb.	13
" " "	N. R. Marshman	No. 277,309	May	8
" " "	John McTammany	No. 273,120	Feb.	27
" " "	"	No. 273,870	Mar.	13
" " "	"	No. 284,315	Sept.	4

Musical Instrument—Mechanical	J. Metzger	No. 270,686	Jan. 16
" " "	R. W. Pain	No. 270,606	Jan. 16
" " "	E. Welte	No. 287,599	Oct. 30
" " "	O. Zabekow	No. 290,726	Dec. 25
Keyboard Attachment	S. Jenkins	No. 280,043	June 26
" "	J. Schwertner	No. 277,067	May 8
" "	W. Thorpe	No. 281,947	July 24
" "	A. H. Hammond	No. 271,064	Jan. 23

Patents of 1884

Music Machine for Creasing Sheet	J. Morgan	No. 308,624	Dec. 2
Perforating Machine	H. B. Horton	No. 300,368	June 17
" "	G. H. Chinnock	No. 298,066	May 6
" "	P. Ehrlich	No. 296,685	Nov. 18
" "	M. Gally	No. 296,685	Apr. 8
" "	"	No. 305,806	Sept. 30
" "	"	No. 309,616	Dec. 23
" "	A. H. Hammond	No. 296,165	Apr. 1
" "	N. R. Marshman	No. 293,184	Feb. 5
" "	O. Spaethe	No. 296,238	Apr. 1
Keyboard Attachment	W. T. Weir	No. 304,981	Sept. 9
" "	E. T. O'Neill	No. 299,492	May 27
" "	J. Maxfield	No. 308,619	Dec. 2
Transposition Device	W. Bohrer	No. 297,222	Apr. 22

Patents of 1885

Perforating Machine	R. T. Smith	No. 318,049	May 19
Recording Attachment for Keyboard Instruments	B. Greener	No. 321,358	June 30
Music Sheet	W. Shaw	No. 322,013	July 14
Music Sheet—Mechanical	Paul Ehrlich	No. 310,501	Jan. 6
Perforating Machine	J. Maxfield	No. 330,913	Nov. 24
Music Sheet and Roll	H. Thomas	No. 327,038	Sept. 29
Musical Instrument—Mechanical	J. McTammany	No. 328,503	Oct. 20
" " "	J. H. Chase	No. 318,448	May 26
" " "	C. Donadoni	No. 310,498	Jan. 6
" " "	M. Gally	No. 314,012	Mar. 1
" " "	"	No. 329,304	Oct. 27
" " "	"	No. 331,747	Dec. 1
" " "	G. B. Hawkins	No. 315,774	Apr. 14
" " "	M. Hock	No. 312,636	Feb. 24
" " "	J. McTammany	No. 321,738	July 7
" " "	T. Meinhold	No. 329,473	Nov. 3
" " "	R. W. Pain	No. 322,544	July 21
" " "	L. T. Stanley	No. 322,566	July 21
" " "	Frank Stone	No. 326,172	Sept. 15
" " "	M. A. Weir	No. 329,419	Oct. 27
" " "	"	No. 329,420	Oct. 27
Keyboard Attachment	W. T. Weir	No. 327,628	Oct. 6
" "	J. W. Long	No. 320,148	June 16
" "	E. T. O'Neill	No. 316,908	Apr. 28
" "	R. H. Bishop and W. Down	No. 311,947	Feb. 10
" "	W. R. Eddington	No. 326,412	Sept. 15
" "	C. T. Meyering	No. 326,444	Sept. 15

Patents of 1886

Music Sheet Perforated	G. B. Kelly	No. 350,747	Oct. 12
" " "	"	No. 350,748	Oct. 12
" " "	M. Gally	No. 344,646	June 29
Air Engine	F. Stone	No. 355,229	Dec. 28
Musical Instrument—Mechanical	H. Burckas	No. 343,795	June 15

Musical Instrument—Mechanical	J. H. Chase	No. 335,272	Feb.	2
" " "	F. E. P. Ehrlich	No. 335,903	Feb.	9
" " "	"	No. 338,496	Mar.	23
" " "	"	No. 343,116	June	1
" " "	"	No. 349,634	Sept.	21
" " "	M. Gally	No. 343,900	June	15
" " "	"	No. 346,152	July	27
" " "	"	No. 351,171	Oct.	19
" " "	"	No. 351,172	Oct.	19
" " "	H. F. Hambruck	No. 352,054	Nov.	2
" " "	P. H. Hartling	No. 340,876	Apr.	27
" " "	O. P. Lockmann	No. 350,541	Oct.	12
" " "	H. Lorentz	No. 333,645	Jan.	5
" " "	R. W. Pain	No. 335,534	Feb.	2
" " "	E. G. Strum	No. 353,434	Nov.	30
" " "	J. E. Treat	No. 335,549	Feb.	2
" " "	A. Wales	No. 339,237	Apr.	6
Air Engine	W. D. Parker	No. 355,201	Dec.	28
Keyboard Attachment	R. T. Smith	No. 346,237	July	27
" "	"	No. 346,238	July	27
" "	"	No. 346,236	July	27
Pneumatic Action	M. Gally	No. 351,173	Oct.	19
" "	F. Stone	No. 353,894	Dec.	7

Patents of 1887

Musical Instrument—Mechanical	J. McTammany	No. 374,616	Dec.	13
" " "	E. Parr	No. 359,279	Mar.	15
" " "	A. H. Arno	No. 361,200	Apr.	12
" " "	"	No. 361,201	Apr.	12
" " "	J. H. Chase	No. 360,280	Mar.	29
" " "	"	No. 363,591	May	24
" " "	G. H. Chinnock and H. S. Taylor	No. 375,531	Dec.	27
" " "	F. E. P. Ehrlich	No. 368,080	Aug.	9
" " "	H. T. Hambruch	No. 371,449	Oct.	11
" " "	M. Gally	No. 370,466	Sept.	27
" " "	G. B. Kelly	No. 356,690	Jan.	25
" " "	T. E. Kenyon	No. 358,157	Feb.	22
" " "	C. Kretschmar	No. 360,163	Mar.	29
" " "	C. A. Kuster	No. 361,299	Apr.	19
" " "	"	No. 361,300	Apr.	19
" " "	"	No. 363,400	May	24
" " "	A. A. McIntire	No. 355,880	Jan.	11
" " "	H. B. Morris, S. R. Tesdel and T. Labor	No. 363,841	May	31
" " "	R. W. Pain	No. 356,422	Jan.	18
" " "	"	No. 356,599	Jan.	25
" " "	F. Pietschmann	No. 363,480	May	24
" " "	G. Racca and W. Seward	No. 357,502	Feb.	8
" " "	J. E. Treat	No. 369,667	Sept.	6
" " "	C. A. Ahlstrom	No. 356,971	Feb.	1
" " "	G. W. van Deusen	No. 363,564	May	24
" " "	H. Richards	No. 364,041	May	3
Keyboard Attachment	H. T. Hambruch	No. 371,450	Oct.	11
Air Engine	G. B. Kelly	No. 357,933	Feb.	15
Pneumatic Action	W. D. Parker	No. 368,164	Aug.	9
" "	"	No. 368,165	Aug.	9
" "	G. H. Pritchard and G. Ahlstrom	No. 363,082	May	17
" "	W. D. Parker	No. 355,336	Jan.	4

Patents of 1888

Musical Instrument	A. Lowmiller	No. 376,443	Jan.	17
Keyboard Attachment	A. L. Caldera	No. 382,028	May	1

Musical Instrument—Mechanical	H. Burckas	No. 387,141	July	31
" " "	M. Gally	No. 380,716	Apr.	10
" " "	"	No. 387,635	Aug.	14
" " "	J. McTammany	No. 390,385	Oct.	2
" " "	"	No. 390,386	Oct.	2
" " "	F. Stone	No. 394,794	Dec.	18
" " "	L. E. J. Thibouville	No. 380,608	Apr.	3
" " "	W. B. Tremaine	No. 376,725	Jan.	17
" " "	G. T. Wells	No. 393,456	Nov.	27
Musical Instrument—Pneumatic, Wind	W. D. Parker	No. 394,006	Dec.	4
" " " Action	"	No. 394,005	Dec.	4
Music Sheet—Mechanical	J. Crannell	No. 397,887	Mar.	20

Patents of 1889

Musical Instrument	C. W. Bingers	No. 409,315	Aug.	2
" "	J. C. Degan and J. Carroll	No. 408,655	Aug.	6
" "	E. R. Norcross	No. 403,481	May	14
" "	R. W. Pain	No. 417,680	Dec.	17
Musical Instrument—Automatic	T. A. Macaulay	No. 401,187	Apr.	9
" " "	"	No. 401,188	Apr.	9
" " "	J. McTammany	No. 400,102	Mar.	26
" " "	R. W. Pain	No. 412,657	Oct.	8
Keyboard Attachment	A. L. Caldera	No. 395,543	Jan.	1
Musical Instrument—Mechanical	M. Gally	No. 409,678	Aug.	27
" " "	W. H. Gilman	No. 403,834	May	21
Attachment for Musical Instrument	E. W. Sylvan	No. 397,877	Feb.	12

Patents of 1890

Music Sheet—Mechanical	F. E. P. Ehrlich	No. 425,935	Apr.	15
Musical Instrument—Automatic	J. M. Farmer	No. 443,909	Dec.	30
" " "	F. E. P. Ehrlich	No. 433,935	Aug.	12
" " "	A. Shaeffer	No. 421,033	Feb.	11
" " "	G. W. Van Dusen	No. 440,979	Nov.	18
Keyboard Attachment	C. De Vilbise	No. 440,995	Nov.	18
" "	E. H. Hofinghoff	No. 426,812	Apr.	29
" "	G. H. Chinnock	No. 443,252	Dec.	23
Mechanical Indicator	J. McTammany	No. 422,964	Mar.	11

Patents of 1891

Musical Instrument—Mechanical	J. L. Muller	No. 459,590	Sept.	15
" " "	C. Pietschmann	No. 447,970	Mar.	10
" " "	E. Schilling	No. 450,257	Apr.	14
" " "	W. O. Spaethe	No. 457,445	Aug.	11
Keyboard Attachment	J. P. Becker	No. 449,396	Mar.	31

Patents of 1892

Electrical Mechanical Instrument	W. H. Gilman	No. 488,520	Dec.	20
Mechanical Musical Instrument	C. Pietschmann	No. 471,559	Mar.	29
" " "	F. Pietschmann	No. 474,999	May	17
Action—Mechanical	J. L. Muller	No. 480,854	Aug.	16
Attachment—Mechanical	J. Cocchi and T. A. Zeitler	No. 467,572	Jan.	26
Recording Mechanism	J. B. Calcano and I. Panezo	No. 467,854	Jan.	26

Patents of 1893

Musical Instrument—Electric	P. S. Singer	No. 501,510	July	18
Keyboard Attachment	Chas. C. Kropp	No. 502,099	July	25
Mechanical Musical Instrument	F. Pietschmann	No. 491,223	Feb.	7
" " "	T. Zollner	No. 494,664	Apr.	4
" " "	O. P. Lochman	No. 510,115	Jan.	17
Perforated Sheet	A. Peterson	No. 489,568	Jan.	10

Patents of 1894

Perforating Machine	W. E. Griggs	No. 527,970	Oct. 23
Keyboard Attachment	M. J. Bilz	No. 513,295	Jan. 23
" "	G. Brown	No. 514,257	Feb. 6
" "	L. Utt	No. 530,369	Dec. 4
Musical Instrument—Automatic	W. H. Hoschke	No. 531,037	Dec. 18
" " "	G. B. Kelly	No. 517,805	Apr. 3
" " "	R. W. Lyle	No. 529,928	Nov. 27
Keyboard Attachment	J. D. Case	No. 529,895	Nov. 27
Music Sheet—Mechanical	A. Amthor	No. 529,995	Nov. 27

Patents of 1895

Music Recorder	A. Rivoire	No. 537,937	Apr. 23
Music Sheet—Mechanical	Paul Ehrlich	No. 546,133	Sept. 10
Musical Instrument	J. Brand	No. 551,254	Dec. 10
" " Automatic	D. Imhof	No. 540,059	May 28
Electrical Control	P. Wuest, Jr.	No. 531,890	Jan. 1
Musical Instrument—Mechanical	T. J. Bernard	No. 550,154	Nov. 19
" " "	M. Hauschild	No. 531,933	Jan. 1
" " "	A. Richter	No. 552,303	Dec. 31
Perforated Sheet	B. Ruckert	No. 541,123	June 18
Musical Instrument—Pneumatic	R. A. Gally	No. 545,156	Aug. 27
Electrical Control	F. W. Hedgeland	No. 547,072	Oct. 7
Note Sheet	F. Schaub	No. 532,290	Jan. 8
Tracker Bar	H. C. Reichardt	No. 544,322	Aug. 13

Patents of 1896

Roll Making Mechanism	J. B. Tracy	No. 570,352	Oct. 27
Music Writer	R. M. Saint	No. 572,571	Dec. 8
Musical Instrument—Mechanical	T. A. Macaulay	No. 564,384	July 21
" " "	"	No. 564,385	July 21
" " "	"	No. 564,386	July 21
" " "	"	No. 564,387	July 21
" " "	A. Richter	No. 560,283	May 19
" " "	W. S. Reed	No. 558,419	Apr. 14
" " "	W. H. Gilman (Electrical)	No. 565,739	Aug. 11
" " "	F. L. Bauer	No. 553,384	Jan. 21
" " "	P. Ehrlich	No. 566,150	Aug. 18
" " "	M. O. Claus, F. B. Puttman and H. E. C. Felix	No. 574,240	Dec. 29
" " "	H. F. Hambruch	No. 555,159	Feb. 25
" " "	F. P. Puttman and M. O. Claus	No. 563,800	July 14
" " "	E. P. Kiessner	No. 569,233	Oct. 13
" " "	W. H. Kellins	No. 563,415	July 7
" " "	O. Sorgan	No. 572,458	Dec. 1
" " "	W. B. Tremaine and R. W. Pain	No. 552,796	Jan. 7
Perforating Mechanism	A. Vernaz	No. 565,650	Aug. 11
Note Sheet—Mechanical	A. Richter	No. 560,540	May 19
Pneumatic Action	H. C. Reichardt	No. 558,985	Apr. 28
" "	"	No. 568,278	Sept. 22
Tempo Indicator	J. H. Chase	No. 571,746	Nov. 24
Musical Machine	J. Baumgartner	No. 572,287	Dec. 1
" " (Electrical)	G. Breed	No. 560,679	May 26

Patents of 1897

Music—Electrical	T. Cahill	No. 580,035	Apr. 6
Music Recorder	E. K. Adams	No. 576,246	Feb. 2
Musical Instrument—Automatic	G. A. Brachhausen	No. 596,393	Dec. 28
" " "	Theo. P. Brown	No. 581,390	Apr. 27
" " "	"	No. 584,492	June 15
Music—Electrical	W. B. Flemming	No. 585,663	July 6

Music—Electrical	G. A. Brachhausen	No. 595,901	Dec. 21
" "	G. H. Davis	No. 576,342	Feb. 2
" "	R. W. Pain	No. 589,535	Sept. 7
Foot Pedal Mechanism	T. P. Brown	No. 595,466	Dec. 14
Keyboard Attachment	F. A. Wallace	No. 579,201	Mar. 23
Musical Instrument—Mechanical	G. A. Brachhausen	No. 585,737	July 6
" " "	"	No. 593,762	Mar. 16
" " "	A. J. Cuendet	No. 581,981	May 4
" " "	L. Stocker	No. 590,918	Sept. 28
" " "	J. Wellner	No. 585,246	June 29
" " "	M. Welte	No. 578,127	Mar. 2
Musical Instrument—Pneumatic	Melville Clark	No. 576,032	Jan. 26
" " "	" "	No. 576,030	Jan. 26
Mech. Musical	T. G. Hoster	No. 574,426	Jan. 5
Wind Engine	F. W. Hedgeland	No. 593,215	Nov. 9
Pedal Detachable	F. H. Dernell and P. H. Prehmer	No. 589,644	Sept. 7
Note Sheet	E. L. Cuendet and T. J. Bernard	No. 577,839	Nov. 2
Feed Mechanism	E. L. Cuendet	No. 589,421	Sept. 7
Air Engine	T. P. Brown	No. 594,981	Dec. 7
Tune Sheet Mechanism	J. E. Sanders	No. 593,165.	Nov. 2
Keyboard Attachment	G. P. Clark	No. 579,958	Apr. 6

Patents of 1898

Recording and Reproducing Device	E. K. Adams	No. 608,415	Aug. 2
Music Recording Mechanism	A. A. Latewlere	No. 610,141	Aug. 30
Roll Mechanism	F. W. Hedgeland	No. 613,924	Nov. 8
" "	"	No. 615,850	Dec. 13
Regulating Mechanism	"	No. 614,864	Nov. 29
Music Work "	T. Gronan	No. 599,703	Mar. 1
Keyboard Attachment	M. E. Verdier	No. 602,248	Apr. 12
Musical Instrument—Mechanical	M. S. Wright	No. 596,730	Jan. 4
" " "	O. H. Arno	No. 596,768	Jan. 4
" " (Electro) "	G. H. Davis	No. 606,813	July 5
" " "	A. Keller	No. 599,710	Mar. 1
" " "	P. W. Pain	No. 601,163	Mar. 22
" " "	A. Richter	No. 605,134	June 7
Pedal Mechanism	R. M. Bent	No. 613,282	Nov. 1
Musical Instrument Picker	W. Gustafson	No. 606,207	June 28
" " "	C. B. Kendall and J. P. Tirrell	No. 606,220	June 28
" " "	W. A. Lorenz and C. E. deLue	No. 606,222	June 28
Auto Pneumatic Action	C. B. Kendall	No. 606,219	June 28
Music Roll	R. W. Pain	No. 601,162	Mar. 22
" "	"	No. 601,161	Mar. 22
Pneumatic Action	J. P. Tirrell	No. 612,597	Oct. 18
Spring Motor	Melville Clark	No. 616,077	Dec. 20
Music Making—Artificial	C. Schmid	No. 602,961	Apr. 26

Patents of 1899

Regulating Mechanism	H. A. Herr	No. 622,680	Apr. 11
" "	F. W. Hedgeland	No. 629,361	July 25
Musical Instrument—Mechanical	M. S. Wright	No. 634,601	Oct. 10
" " "	"	No. 638,615	Dec. 5
" " "	G. A. Brachhausen	No. 621,025	Dec. 5
Bellows	E. S. Votey	No. 636,594	Sept. 26
Musical Instrument—Mechanical	T. Gronan	No. 627,999	July 4
" " "	T. A. Plessing	No. 621,372	Mar. 21
" " "	W. H. Rollins	No. 621,289	Mar. 14
Musical Instrument—Electric Action	W. B. Flemming	No. 621,963	Nov. 28
Keyboard Attachment	Theo. P. Brown	No. 634,872	Oct. 17
Take Up Spool	P. Welin	No. 637,540	Nov. 21
Tempo Indicator	J. H. Chase	No. 658,955	Dec. 12

Patents of 1900

Music Chart Mech.	S. B. Turner	No. 658,902	Oct. 2
" " "	"	No. 659,113	Oct. 2
Recorder and Duplicator	P. J. Meahl	No. 654,473	July 24
Perforating Machine	C. A. Kuster	No. 642,564	Jan. 30
Winding Mech.	F. R. Goolman	No. 647,086	Apr. 10
Musical Instrument—Mechanical	J. A. Weser	No. 648,717	May 1
" " "	"	No. 649,623	May 15
" " "	G. A. Brachhausen	No. 661,466	Nov. 6
" " "	"	No. 657,081	Sept. 4
" " "	C. A. Kuster	No. 640,922	Jan. 9
" " "	H. Muller	No. 657,560	Sept. 11
Pneumatic Action	B. Miller	No. 648,277	Apr. 24
" "	Melville Clark	No. 660,560	Oct. 30
Musical Instrument—Mechanical	J. O'Connor	No. 661,920	Nov. 13
" " "	J. W. Whitlick	No. 658,134	Sept. 18
Tone Modulator	E. Klaber	No. 660,381	Oct. 23
Wind Engine	R. A. Gally	No. 661,860	Nov. 13
Pedal Mechanism	E. Seiler	No. 641,800	Jan. 23
Pneumatic Regulator	W. B. Flemming	No. 659,442	Oct. 9
Keyboard Attachment	H. M. Salyer	No. 653,263	July 10

Patents of 1901

Music Sheet—Mechanical	S. B. Turner	No. 684,960	Oct. 22
Musical Instrument—Mechanical	E. R. Kleemicher	No. 688,866	Dec. 17
Music Roll	G. B. Kelly	No. 688,253	Dec. 3
Educational Apparatus	R. L. Fraisher	No. 666,247	Jan. 15
Music Sheet—Adjustable	T. C. Brinkley	No. 689,458	Dec. 24
" " —Compensation	R. A. Gally	No. 669,342	Mar. 5
Music Spool	H. H. Mansfield	No. 686,664	Nov. 12
Musical Instrument—Mechanical	A. Junghaus	No. 676,002	June 11
" " "	E. de Kleist	No. 677,769	July 2
" " "	J. A. Weser	No. 681,764	Sept. 3
" " "	D. K. Marshall	No. 678,318	July 9
" " "	"	No. 678,319	July 9
" " "	R. J. Bennett	No. 675,706	June 4
" " —Electrical	R. L. Venerto	No. 681,939	Sept. 3
" " "	H. S. Brown	No. 678,095	July 9
Keyboard Attachment	J. P. H. Adams	No. 682,014	Sept. 3
Musical Instrument—Mechanical	J. Wellner	No. 666,834	Jan. 29
" " "	E. P. Riessner	No. 668,217	Feb. 19
" " "	E. W. Applegate	No. 675,551	June 4
" " "	C. L. Davis	No. 676,031	June 11
" " "	H. Thorens	No. 681,895	Sept. 3
" " "	P. Welin	No. 683,825	Oct. 1
Pedal Mechanism	W. C. Bosenburg	No. 678,859	July 23
Musical Instrument—Mechanical	E. M. Skinner	No. 667,039	Jan. 29
" " "	G. H. Davis	No. 674,552	May 21
" " "	J. Courville	No. 683,727	Oct. 1
Keyboard Attachment	A. E. Whitehead	No. 685,546	Oct. 29
Musical Instrument—Mechanical	F. Schneider	No. 668,885	Feb. 26
" " "	J. Panholzer	No. 674,875	May 28
Controlling Mechanism	E. de Kleist	No. 674,875	May 28
Pneumatic Action	C. L. Davis	No. 675,468	June 4
Tune Sheet Support	E. Klaber	No. 671,218	Apr. 2
Musical Instrument—Mechanical	R. A. Gally	No. 685,270	Oct. 29
Loud and Soft Pedal	E. Klaber	No. 671,217	Apr. 2
Pedal Mechanism	Theo. P. Brown	No. 688,013	Dec. 3
Pneumatic Key	H. M. Salyer	No. 686,682	Nov. 12
Pneumatic Bellows	F. B. Brown	No. 670,700	Mar. 26
Pneumatic Self-Acting	H. Schwesinger	No. 671,239	Apr. 2

Puppet Valve	T. P. Brown	No. 677,059	June 25
Sola Attachment	T. Casson	No. 678,718	July 16
Tracker Board	H. R. Moore	No. 684,845	Oct. 22
Winding and Rewinding	A. E. Whitehead	No. 683,717	Oct. 1

Patents of 1902

Music Sheet Mech.	C. M. Halvoison	No. 708,139	Sept. 2
Music Marking and Reading	M. S. Logan	No. 698,298	Apr. 22
Music Roll	L. B. Doman	No. 697,821	Apr. 15
" "	M. Gally	No. 713,870	Nov. 18
" "	P. Welin	No. 694,450	Mar. 4
Roll Mechanism	F. Engelhardt	No. 691,898	Jan. 28
Music Sheet	C. H. Shaw	No. 709,054	Sept. 16
Perforating Apparatus	H. M. Salyer	No. 702,887	June 17
Expression Mark	F. L. Young	No. 692,968	Feb. 11
Musical Instrument—Mechanical	J. McTammany	No. 692,207	Jan. 28
" " "	J. Carpentier	No. 697,980	Apr. 22
" " "	E. de Kleist	No. 700,781	May 27
" " "	G. A. Brachhausen	No. 713,053	Nov. 11
" " "	E. de Kleist	No. 715,484	Dec. 9
Keyboard Attachment	H. M. Salyer	No. 711,004	Oct. 14
" "	C. E. Peterson	No. 712,844	Nov. 4
Musical Instrument—Mechanical	F. W. Wood and E. H. Styles	No. 702,898	June 17
" " "	H. E. Sharps	No. 696,762	Apr. 1
" " —Control	F. L. Young	No. 692,968	Feb. 11
Spring Motor	H. E. Sharp and W. T. Cooper	No. 697,754	Apr. 15
Musical Instrument—Electrical	H. E. Beach	No. 709,295	Sept. 16
Keyboard Attachment	E. S. Votey	No. 696,216	Mar. 25
Mech. Musical Instrument	J. McTammany	No. 692,208	Jan. 28
" " "	C. L. Emmons	No. 698,480	Apr. 29
" " "	J. McTammany	No. 705,952	July 29
" " "	E. C. Phillips	No. 711,674	Oct. 21
" " "	E. S. Votey	No. 717,146	Dec. 3
Tracker Board	E. M. Skinner	No. 715,307	Dec. 9
Keyboard Attachment	H. M. Salyer	No. 700,830	May 27
Musical Instrument—Mechanical	J. Kruft	No. 715,089	Dec. 2
Keyboard Attachment	J. Courville	No. 700,677	May 20
" "	H. M. Salyer	No. 700,829	May 27
Tracker Bar	E. S. Votey	No. 712,162	Oct. 28
Transposing Mechanism	Melville Clark	No. 709,963	Sept. 30
Tune Controller	E. de Kleist	No. 713,653	Nov. 18
Pneumatic Valve	Melville Clark	No. 698,905	Apr. 29
Perforating Machine	" "	No. 698,104	Apr. 22
Melody Stop	R. W. Pain	No. 713,676	Nov. 18
Operating Sheet	E. S. Votey	No. 707,283	Aug. 19
Keyboard Attachment	H. M. Salyer	No. 703,743	July 1
Pneumatic Motor or Air Engine	H. F. Hall	No. 711,158	Oct. 14

Patents of 1903

Music Box and Phonograph	H. A. Gaulschi	No. 743,858	Nov. 10
Musical Instrument—Mechanical	G. W. Haywood	No. 747,551	Dec. 22
Accentuation Mechanism	N. D. Hosley and S. R. Harcourt	No. 736,600	Aug. 18
Expression Indicator	G. H. Davis	No. 748,266	Dec. 29
Portable Music Sheet	F. W. Parkin	No. 731,214	June 16
Music Record Diagram	R. A. Gally	No. 722,904	Mar. 17
Recording Apparatus	L. O. Rissman	No. 722,904	Mar. 17
" "	G. E. Prince	No. 726,754	Apr. 28
Music Roll	G. B. Kelly	No. 718,256	Jan. 13
" "	F. R. Wyckoff	No. 731,008	June 16
" "	R. W. Pain	No. 734,596	July 28

Music Roll	W. W. Harrington	No. 741,400	Oct. 13
" "	F. L. Young	No. 718,410	Jan. 13
" "	J. Courville	No. 741,463	Oct. 13
" "	G. H. Davis	No. 747,859	Dec. 22
Perforating Mechanism	H. P. Ball	No. 736,571	Aug. 18
" "	"	No. 747,358	Dec. 22
" "	E. B. and M. F. Gregor	No. 726,676	Apr. 28
Music Roll	G. H. Davis	No. 739,991	Sept. 29
Sheet Feeding Mechanism	A. P. Roth	No. 741,072	Oct. 13
Music Sheet	R. W. Pain	No. 725,358	Apr. 14
" "	C. L. Davis	No. 736,228	Aug. 11
Perforating Mechanism	H. Meyer	No. 745,881	Dec. 1
Music Sheet Spool	P. Wuest, Jr.	No. 731,261	June 16
Duplicator for Music Sheets	G. H. Davis	No. 747,687	Dec. 22
Music Sheet Trimmer	L. B. Doman	No. 733,016	July 7
" " Marker	G. H. Davis	No. 747,858	Dec. 22
Perforated Sheet Cutter	R. W. Pain	No. 725,358	Apr. 14
Pneumatics and Bellows	W. T. Cooper	No. 725,677	Apr. 21
Accentuating Mechanism	J. H. Dickinson	No. 743,065	Nov. 3
" "	F. Young	No. 743,130	Nov. 3
Musical Instrument Mechanism	E. de Kleist	No. 701	Apr. 28
" " "	C. Coleman	No. 727,906	May 12
" " "	G. A. Brachhausen	No. 723,235	Mar. 24
Keyboard Attachment	F. P. Brown	No. 723,820	Mar. 31
" "	P. Welin	No. 727,725	May 12
" "	"	No. 748,126	Dec. 29
" "	H. M. Salyer	No. 734,964	July 28
Player Bellows	M. Clark	No. 725,824	Apr. 21
Sheet Controller	E. G. Clark	No. 743,830	Nov. 10
Musical Instrument—Electrical	G. H. Davis	No. 719,093	Jan. 27
" " "	"	No. 733,702	July 14
Keyboard Attachment	V. Bessier	No. 729,260	May 26
" "	H. B. Tremaine	No. 729,928	June 2
" "	A. Tschofen	No. 742,102	Oct. 20
Musical Instrument—Mechanical	A. Junod-Turin	No. 717,581	Jan. 6
" " "	H. M. Smith	No. 721,248	Feb. 24
" " "	C. L. Davis	No. 725,941	Apr. 21
" " "	"	No. 730,517	June 9
" " "	"	No. 744,052	Nov. 17
" " "	P. Wuest, Jr.	No. 744,990	Nov. 24
Keyboard Attachment	E. D. Ackerman	No. 722,476	Mar. 10
" "	"	No. 748,142	Dec. 29
Air Engine	J. Courville	No. 722,196	Mar. 3
Keyboard Attachment	H. M. Salyer	No. 734,963	July 28
" "	F. R. Wyckoff	No. 733,528	July 14
Action—Pneumatic	F. W. Hedgeland	No. 726,913	May 5
" "	F. F. Schoenstein	No. 740,993	Oct. 6
Musical Instrument—Mechanical	W. M. Stine	No. 733,764	July 14
" " "	L. B. Doman	No. 746,472	Dec. 8
" " "	J. Suter and W. Lenk	No. 747,802	Dec. 22
Tracker Bar	F. P. Brown	No. 735,062	Aug. 4
Action—Pneumatic	D. P. and L. F. Boyd	No. 719,641	Feb. 3
Keyboard Attachment	B. F. Stowell	No. 743,992	Nov. 10
Musical Instrument—Electrical	E. M. Skinner	No. 725,595	Apr. 14
Roll—Interchangeable	H. H. Juelg	No. 745,500	Dec. 1
Sheet Adjuster	E. S. Votey	No. 743,118	Nov. 3
Expression Mechanism	"	No. 742,760	Oct. 27
Regulating "	J. B. Tracey	No. 729,977	June 2
Melody Stop	R. W. Pain	No. 717,907	Jan. 6
Action—Pneumatic	J. D. Phillips	No. 730,565	June 9
" "	T. P. Brown	No. 740,391	Oct. 6

Pneumatic Selecting Mechanism	W. H. Rees	No. 734,193	July 21
Primary Pneumatic	R. W. Pain	No. 728,966	May 26
Keyboard Attachment	F. W. Draper and J. Courville	No. 725,424	Apr. 14
Sound Muffler	M. Clark	No. 727,904	May 12
Spool	A. W. Nunn	No. 733,738	July 14
Tracker Bar Attachment	A. Anderson	No. 739,134	Sept. 15
Transposing Mechanism	F. L. Young	No. 729,988	June 2

Patents of 1904

Music Chart—Mechanical	S. B. Turner	No. 766,979	Aug. 9
Roll Controller	A. Anderson	No. 757,874	Apr. 19
Musical Instrument—Mechanical	F. C. White	No. 764,221	July 5
" " "	C. L. Davis	No. 769,889	Sept. 13
Recording Mechanism	R. A. Gally	No. 749,181	Jan. 12
" "	J. Bunzl-Federn	No. 777,179	Dec. 13
Music Spool	T. F. Collins	No. 761,449	May 31
Roll Controller	M. Gally	No. 751,494	Feb. 9
Music Spool	G. B. Kelly	No. 777,956	Dec. 20
" "	"	No. 777,957	Dec. 20
" "	W. S. Pain	No. 767,830	Aug. 16
" "	M. S. Wright	No. 767,673	Aug. 16
Music Perforator	H. P. Ball	No. 778,436	Dec. 27
" "	"	No. 761,131	May 31
" "	"	No. 761,132	May 31
" "	"	No. 763,038	June 21
" "	"	No. 766,803	Aug. 9
Music Spool	W. S. Pain	No. 765,591	July 19
Music Scale	A. S. Seville	No. 777,551	Dec. 13
Music Sheet	H. P. Ball	No. 757,010	Apr. 12
" "	F. Taft	No. 778,205	Dec. 20
Music Sheet Drive	H. Meyer	No. 765,503	July 10
Music Sheet Control	J. H. Dickinson	No. 772,225	Oct. 11
Music Sheet	F. C. White	No. 759,575	May 10
Perforating Mechanism	A. L. Hart	No. 752,221	Feb. 16
" "	E. C. Philips	No. 767,363	Aug. 9
" "	F. Taft	No. 767,722	Aug. 10
Music Sheet	E. R. Perkins	No. 770,103	Sept. 13
Perforating Mechanism	E. C. Philips	No. 767,362	Aug. 9
" "	N. Collins	No. 775,237	Nov. 15
Accentuating Mechanism	R. W. Pain	No. 766,516	Aug. 2
Musical Instrument—Mechanical	F. Schippers	No. 755,944	Mar. 29
" " "	E. S. Votey	No. 751,229	Feb. 2
Note Sheet Mechanism	C. A. Shaffer	No. 758,860	May 3
Musical Instrument—Mechanical	W. H. Rees	No. 751,808	Feb. 9
" " "	W. H. Gilman and J. P. Tirrell	No. 763,877	June 28
" " "	P. Welin	No. 768,414	Aug. 23
" " "	E. de Kleist	No. 770,862	Sept. 27
" " "	T. B. Powers and M. R. Jewell	No. 753,809	Mar. 1
" " "	W. H. Rees	No. 751,755	Feb. 9
" " "	H. E. Sharps (Reissue)	No. 12,215	Apr. 26
Controlling Mechanism	A. Keller	No. 752,683	Feb. 23
" "	W. T. Cooper, Jr., and H. E. Sharps	No. 764,352	July 5
Spring Motor	H. E. Sharps and W. T. Cooper, Jr. (Reissue)	No. 12,289	Nov. 22
Musical Instrument—Electric	E. A. Petching	No. 762,083	June 7
" " —Mechanical	H. P. Ball	No. 778,437	Dec. 27
Wind Engine	W. F. Cooper, Jr. and H. E. Sharps	No. 757,095	Apr. 12
Note Striking Mechanism	E. H. Klaber	No. 759,532	May 10
Pedal Mechanism	A. F. Norris	No. 762,489	June 14
Musical Instrument—Mechanical	L. W. Jones	No. 778,365	Dec. 27
Feed Mechanism	J. D. Smith	No. 756,070	Mar. 29
Pneumatic Action	M. S. Wright	No. 767,672	Aug. 16

Musical Instrument—Mechanical	C. A. Shaffer	No. 773,598	Nov. 1
Keyboard Attachment	J. Courville (Reissue)	No. 12,189	Jan. 5
" "	" "	No. 755,364	Mar. 22
Speed Regulator	H. P. Ball	No. 749,517	Jan. 12
Tracker Bar	J. T. Sibley	No. 748,801	Jan. 5
" "	J. Courville and W. Draper	No. 762,986	June 21
Pneumatic Valve	E. de Kleist	No. 758,666	May 3
Variation Register	Melville Clark	No. 774,309	Nov. 8
Action—Pneumatic	M. Gally	No. 752,060	Feb. 16
Expression Mechanism	R. W. Pain	No. 752,920	Feb. 23
Keyboard Attachment	F. P. Brown	No. 772,208	Oct. 11
Electric Contact	S. B. Smith	No. 777,153	Dec. 13
Division Indicator	F. C. White	No. 759,576	May 10
Expression Mechanism	Irving B. Smith	No. 777,226	Dec. 13
" "	E. S. Votey	No. 767,781	Aug. 16
Music Sheet Control	F. P. Brown	No. 764,555	———
Expression Mechanism	R. W. Pain	No. 754,886	Mar. 15
Note Sheet	C. A. Shaffer	No. 758,861	May 3
Pneumatic Motor	C. S. Burton	No. 756,469	Apr. 5
Pneumatic Action	M. S. Wright	No. 769,424	Sept. 6

PATENTS ARRANGED ALPHABETICALLY

Ackerman, E. D. 1903—March 10—722,476; December 29—748,142. Keyboard Attachment,

Adams, E. K. 1897—February 2—576,246. Automatic Music Recorder.

Adams, E. K. 1898—August 2—608,415. Recording and Reproducing Device.

Adams, J. P. H. 1901—September 3—682,014. Keyboard Attachment.

Ahlstrom, C. A. 1887—February 1—356,971. Mechanical Musical Instrument.

Ahlstrom, G. and Pritchard. 1887—May 17—363,082. Pneumatic Action.

Amthor, A. 1894—November 27—529,995. Mechanical Music Sheet.

Anderson, A. 1903—September 15—739,134. Tracker Bar Attachment.

Anderson, A. 1904—September 19—757,874. Music Roll Controller.

Applegate, E. W. 1901—June 4—675,551. Mechanical Musical Instrument.

Arno, A. H. 1887—April 12—361,200, 361,201. Mechanical Musical Instrument.

Arno, O. H. 1883—December 18, 10,279R. Mechanical Musical Instrument.

Arno, O. H. 1898—January 4—596,768. Mechanical Musical Instrument.

Bailey, J. 1883—October 2—286,108. Mechanical Music Sheet.

Bain, Alexander. 1847—October 7. English Player, Incomplete idea, 10; Abandoned.

Ball, H. P. 1903—August 18—736,571; December 22—747,358. Perforating Mechanism.

Ball, H. P. 1904—January 12—749,517. Speed Regulator.

Ball, H. P. 1904—April 20—757,010. Mechanical Music Sheet.

Ball, H. P. 1904—May 31, 761,131, 761,132; June 21, 763,038; August 9, 766,803; December 27, 778,436. Music Roll Perforator.

Ball, H. P. 1904—December 27—778,437. Mechanical Musical Instrument.

Bauer, F. L. 1896—January 21—553,384. Mechanical Musical Instrument.

Baumgartner, J. 1896—December 1—572,287. Musical Machine.

Beach, H. E. 1902—September 16—709,295. Electrical Musical Instrument.

Becker, J. P. 1891—March 31—449,396. Keyboard Attachment.

Bennett, R. J. 1901—June 4—675,706. Mechanical Musical Instrument.

Bennett, W. W., and Chinnock. American—April 6, 1880—226,279. Mechanical Musical Instrument.

Bent, R. M. 1898—November 1—613,282. Foot Pedal Mechanism.

Bernard, T. J. 1895—November 19—550,154. Mechanical Musical Instrument.

Bernard, T. J., and Cuendet. 1897—November 2—577,839. Mechanical Note Sheet.

Bessier, V. 1903—May 26—729,260. Keyboard Attachment.

Bilz, M. J. 1894—January 23—513,295. Keyboard Attachment.

Bingers, C. W. 1889—August 2—409,315. Mechanical Musical Instrument.

Bishop, R. H., and Down. 1885—February 10—311,947. Keyboard Attachment.

Bohrer, W. 1884—April 22—297,222. Transposing Device.

Bosenburg, W. C. 1901—July 23—678,859. Foot Pedal Mechanism.

Boyd, D. P., and L. F. 1903—February 3—719 641. Pneumatic Action.

Brachhausen, G. A. 1897—July 6—585,737; March 16—593,762. Mechanical Musical Instrument.

Brachhausen, G. A. 1897—December 21—595,901. Electrical Music.

Brachhausen, G. A. 1897—December 28—596,393. Automatic Musical Instrument.

Brachhausen, G. A. 1899—December 5—621,025. Mechanical Musical Instrument.

Brachhausen, G. A. 1900—September 4—657,081; November 6—661,466. Mechanical Musical Instrument.

Brachhausen, G. A. 1902—November 11—713,053. Mechanical Musical Instrument.

Brachhausen, G. A. 1903—March 24—723,235. Mechanical Musical Instrument.

Bradish, J. S., and Hunt. 1849—January 9. American Player; Incomplete idea, 22; Abandoned.

Brand, J. 1895—December 10—551,254. Mechanical Musical Instrument.

Breed, G. 1896—May 26—560,679. Electrical Musical Instrument.

Brinkley, T. C. 1901—December 24—689,458. Adjustable Music Sheet.
Brown, E. H. 1883—June 5—278,771. Mechanical Musical Instrument.
Brown, G. 1894—February 6—514,257. Keyboard Attachment.
Brown, H. S. 1901—July 9—678,095. Electrical Musical Instrument.
Brown, T. P. 1901—March 26—670,700. Pneumatic Bellows.
Brown, T. P. 1901—June 25—677,059. Puppet Valve.
Brown, T. P. 1903—March 31—723,820. Keyboard Attachment.
Brown, T. P. 1897—April 27—581,390; June 15—584,492. Mechanical Musical Instrument.
Brown, T. P. 1897—December 7—594,981. Air Engine.
Brown, T. P. 1897—December 14—595,466. Foot Pedal Mechanism.
Brown, T. P. 1903—August 4—735,062. Tracker Bar.
Brown, T. P. 1899—October 17—634,872. Keyboard Attachment.
Brown, T. P. 1901—December 3—688,013. Foot Pedal Mechanism.
Brown, T. P. 1903—October 6—740,391. Pneumatic Action.
Brown, T. P. 1904—July 12—764,555. Music Sheet Control.
Brown, T. P. 1904—October 11—772,208. Keyboard Attachment.
Bunzl-Federn, J. 1904—December 13—777,179. Recording Mechanism.
Burckas, H. 1886—June 15—343,795. Mechanical Musical Instrument.
Burckas, H. 1888. July 31—387,142. Mechanical Musical Instrument.
Burton, C. S. 1904—April 5—756,469. Pneumatic Motor.
Cahill, T. 1897—April 6—580,035. Electrical Musical Instrument.
Calcano, J. B., and Panezo. 1892—January 26—467,854. Recording Mechanism.
Caldera, A. L. 1888—May 1—382,028. Keyboard Attachment.
Caldera, A. L. 1889—January 1—395,543. Keyboard Attachment.
Carpentier, J. 1902—April 22—697,980. Mechanical Musical Instrument.
Carroll, J., and Degan. 1889—August 6—408,655. Mechanical Musical Instrument.
Case, J. D. 1894—November 27—529,895. Keyboard Attachment.
Casson, T. 1901—July 16—678,718. Solo Attachment.
Chase, J. H. 1885—May 26—318,448. Mechanical Musical Instrument.
Chase, J. H. 1886—February 2—355,272. Mechanical Musical Instrumenpt.
Chase, J. H. 1887—March 29—360,280; May 24—363,591. Mechanical Musical Instrument.
Chase, J. H. 1896—November 24—571,746. Tempo Indicator.
Chase, J. H. 1899—December 12—638,955. Tempo Indicator.
Chinnock, George H., and Bennett. American—April 6, 1880—226,279. Mechanical Musical Instrument.
Chinnock, George H. 1884—May 6—298,066. Perforating Machine.
Chinnock, G. H., and Taylor. 1887—December 27—375,531. Mechanical Musical Instrument.
Chinnock, G. H. 1890—December 23—443,252. Keyboard Attachment.
Clark, E. G. 1903—November 10—743,830. Sheet Controller.
Clark, G. P. 1897—April 6—579,958. Keyboard Attachment.
Clark, Melville. 1897—January 26—576,030, 576,032. Pneumatic Musical Instrument.
Clark, Melville. 1898—December 20—616,077. Spring Motor.
Clark, Melville. 1900—October 30—660,560. Pneumatic Action.
Clark, Melville. 1902—April 22—698,104. Perforating Machine; April 29—698,905. Pneumatic Valve.
Clark, Melville. 1902—September 30—709,963. Transposing Mechanism.
Clark, Melville. 1903—April 21—725,824. Player Bellows.
Clark, Melville. 1903—May 12—727,904. Sound Muffler.
Clark, Melville. 1904—November 8—774,309. Variation Register.
Clous, M. O., and Puttman. 1896—July 14—563,800. Mechanical Musical Instrument.
Clous, M. O., Puttman and Felix. 1896—December 29—574,240. Mechanical Musical Instrument.
Cocchi, J., and Zeitler. 1892—January 26—467.572. Mechanical Attachment.
Coleman, C. 1903—May 12—727,906. Mechanical Musical Instrument.
Collins, N. 1904—November 15—775,237. Perforating Mechanism.
Collins, T. F. 1904—May 31—761,449. Music Spool.
Cooper, W. T., and Sharps. 1902—April 15—697,754. Spring Motor.
Cooper, W. T. 1903—April 21—725,677. Pneumatics and Bellows.
Cooper, W. T., and Sharps, H. E. 1904—April 12—757,095. Wind Engine.
Cooper, W. T., and Sharps, H. E. 1904—July 5—764,352. Controlling Mechanism.
Cooper, W. T., and Sharps. 1904 (Reissue)—November 22—12,289. Spring Motor.
Courville, J. 1901—October 1—683,727. Mechanical Musical Instrument.
Courville, J. 1902—May 20—700,677. Keyboard Attachment.
Courville, J. 1903—March 3—722,196. Air Engine.
Courville, J. 1903—October 13—741,463. Air Engine.
Courville, J. 1904—January 5—12,189; March 22—755,364. Keyboard Attachment.
Courville, J., and Draper. 1903—April 14—725,424. Keyboard Attachment.
Courville, J., and Draper. 1904—June 21—762,986. Tracker Bar.
Crannell, J. 1888—March 20—397,887. Mechanical Music Sheet.

Cuendet, A. J. 1897—May 4—581,981. Mechanical Musical Instrument.
Cuendet, E. L. 1897—September 7—589,421. Feeding Mechanism.
Cuendet, E. L., and Bernard. 1897—November 2—577,839. Automatic Note Sheet.
Davis, C. L. 1901—June 4—675,468. Pneumatic Action.
Davis, C. L. 1901—June 11—676,031. Mechanical Musical Instrument.
Davis, C. L. 1903—April 21—725,941; June 9—730,517; November 17—744,052. Mechanical Musical Instrument.
Davis, C. L. 1903—August 11—736,228. Mechanical Music Sheet.
Davis, C. L. 1904—September 13—769,889. Mechanical Musical Instrument.
Davis, G. Howlett. 1897—February 2—576,342. Electrical Musical Instrument.
Davis, G. Howlett. 1898—July 5—606,813. Electro Musical Instrument.
Davis, G. Howlett. 1901—May 21—674,552. Mechanical Musical Instrument.
Davis, G. Howlett. 1903—December 22—747,858. Music Sheet Marker.
Davis, G. Howlett. 1903—January 27—719,093; July 24—733,702. Electrical Musical Instrument.
Davis, G. Howlett. 1903—September 29—739,991. Music Roll.
Davis, G. Howlett. 1903—December 22—747,859. Mechanical Music Roll.
Davis, G. Howlett. 1903—December 22—747,687. Duplicator for Music Sheets.
Davis, G. Howlett. 1903—December 29—748,266. Expression Indicator.
Dawson, Charles. 1848—November 2. English Player; Incomplete idea, 14; Abandoned.
Degan, J. C., and Carroll. 1889—August 6—408,655. Mechanical Musical Instrument.
De Kleist, E. 1901—May 28—674,875. Controlling Mechanism.
De Kleist, E. 1901—July 2—677,769. Mechanical Musical Instrument.
De Kleist, E. 1902—May 27—700,781. Mechanical Musical Instrument.
De Kleist, E. 1902—November 18—713,653. Time Controller.
De Kleist, E. 1902—December 9—715,484. Mechanical Musical Instrument.
De Kleist, E. 1903—April 28—726,701. Mechanical Musical Instrument.
De Kleist, E. 1904—May 3—758,666. Pneumatic Valve.
De Kleist, E. 1904—September 27—770,862. Mechanical Musical Instrument.
De Lue, C. E., and Lorenz. 1898—June 28—606,222. Musical Instrument Picker.
Dernell, F. H., and Prehmer. 1897—September 7—589,644. Detachable Pedal Mechanism.
De Vilbise, C. 1890—November 18—440,995. Keyboard Attachment.
Dickinson, J. H. 1903—November 3—743,065. Accentuating Mechanism.
Dickinson, J. H. 1904—October 11—772,225. Music Sheet Control.
Doman, L. B. 1902—April 15—697,821. Mechanical Music Roll.
Doman, L. B. 1903—July 7—733,016. Music Sheet Trimmer.
Doman, L. B. 1903—December 8—746,472. Mechanical Musical Instrument.
Donadoni, C. 1885—January 6—310,498. Mechanical Musical Instrument.
Down, W., and Bishop. 1885—February 10—311,947. Keyboard Attachment.
Draper, F. W., and Courville. 1903—April 14—725,424. Keyboard Attachment.
Draper, F. W., and Courville, J. 1904—June 21—762,986. Tracker Bar.
Durkee, A. 1883—July 31—282,179. Mechanical Musical Instrument.
Eddington, W. R. 1885—September 15—326,412. Keyboard Attachment.
Ehrlich, F. E. P. 1886—February 2—355,903; March 23—338,496; June 1—343,116; September 21—349,634. Mechanical Musical Instrument.
Ehrlich, F. E. P. 1887—August 9—368,080. Mechanical Musical Instrument.
Ehrlich, F. E. P. 1890—April 15—425,935. Mechanical Music Sheet.
Ehrlich, F. E. P. 1890—August 12—433,935. Mechanical Musical Instrument.
Ehrlich, Paul. 1883—December 25, 290,672. Mechanical Musical Instrument.
Ehrlich, Paul. 1884—November 18—296,685. Perforating Machine.
Ehrlich, Paul. 1885—January 6—310,501. Mechanical Music Sheet.
Ehrlich, Paul. 1895—September 10—546,133. Mechanical Music Sheet.
Ehrlich, Paul. 1896—August 18—566,150. Mechanical Musical Instrument.
Emmons, C. L. 1902—April 29—698,480. Mechanical Musical Instrument.
Engelhardt, F. 1902—January 28—691,898. Roll Mechanism.
Farmer, J. M. 1890—December 30—443,909. Mechanical Musical Instrument.
Felix, H. E. C., Claus and Puttman. 1896—December 29—574,240. Mechanical Musical Instrument.
Flemming, W. B. 1897—July 6—585,663. Electrical Musical Instrument.
Flemming, W. B. 1899—November 28—621,963. Electrical Musical Instrument Action.
Flemming, W. B. 1900—October 9—659,442. Pneumatic Regulator.
Fourneaux, M. 1863—November 4. French Player, Pin Cylinder. Manufactured, 45.
Fourneaux, M. 1871—August 9. French Player, Perforated Card Board. Manufactured, 45.
Fowler, Azro. 1880—August 21—American. Individual Pneumatic Action, 66.
Fowler, Azro, and Needham. 1881—February 22—American. Individual Pneumatic Action, 68.
Fraisher, R. L. 1901—January 15—666,247. Educational Apparatus.

Gally, M. 1878—May 7—American. Improved Pneumatic System, 64.

Gally, M. 1884—April 8—296,685; September 30—305,806; December 23—309,616. Perforating Machine.

Gally, M. 1883—June 26—279,933; August 7—282,877. Mechanical Musical Instrument.

Gally, M. 1885—March 17—314,012; October 27—329,304; December 1—331,747. Mechanical Musical Instrument.

Gally, M. 1886—June 29—344,646. Perforated Music Sheet.

Gally, M. 1886—June 15—343,900; July 27—346,152; October 19—351,171, 351,172. Mechanical Musical Instrument.

Gally, Merritt. 1886—October 19—American. Individual Pneumatic Action, 69.

Gally, M. 1886—October 19—351,173. Pneumatic Action.

Gally, M. 1887—September 27—370,466. Mechanical Musical Instrument.

Gally, M. 1888—April 10—380,716; August 14—387,635. Mechanical Musical Instrument.

Gally, M. 1889—August 27—409,678. Mechanical Musical Instrument.

Gally, M. 1902—November 18—713,870. Mechanical Music Roll.

Gally, M. 1904—February 9—751,494. Roll Controller.

Gally, M. 1904—February 16—752,060. Pneumatic Action.

Gally, R. A. 1895—August 27—545,156. Pneumatic Musical Instrument.

Gally, R. A. 1900—November 13—661,860. Wind Engine.

Gally, R. A. 1901—March 5—669,342. Music Sheet Compensation.

Gally, R. A. 1901—October 29—685,270. Mechanical Musical Instrument.

Gally, R. A. 1903—March 17—722,904. Music Record Diagram.

Gally, R. A. 1904—January 12—749,181. Music Recording Mechanism.

Gaulschi, H. A. 1903—November 10—743,858. Music Box and Phonograph.

Gilman, W. H. 1889—May 21—403,834. Mechanical Musical Instrument.

Gilman, W. H. 1892—December 20—488,520. Electrical Music Instrument.

Gilman, W. H. 1896—August 11—565,739. Electrical Music Instrument.

Gilman, W. H., and Tirrell, J. P. 1904—June 28—763,877. Mechanical Musical Instrument.

Goolman, F. R. 1900—April 10—647 086. Winding Mechanism.

Greener, B. 1885—June 30—321,358. Recording Attachment for Keyboard Instrument.

Gregor, E. B., and M. F. 1903—April 28—726,676. Perforating Mechanism.

Griggs, W. E. 1894—October 23—527,970. Perforating Machine.

Gronan, T. 1898—March 1—599,703. Music Work Mechanism.

Gronan, T. 1899—July 4—627,999. Mechanical Musical Instrument.

Gustafson, W. 1898—June 28—606,207. Musical Instrument Picker.

Hall, H. F. 1902—October 14—711,158. Pneumatic Motor or Air Engine.

Halvorson, C. M. 1902—September 2—708,139. Mechanical Music Sheet.

Hambruch, H. F. 1886—November 2—352,054. Mechanical Musical Instrument.

Hambruch, H. F. 1887—October 11—371,449. Mechanical Musical Instrument.

Hambruch, H. F. 1887—October 11—371,450. Keyboard attachment.

Hambruch, H. F. 1896—February 25—555,159. Mechanical Musical Instrument.

Hammond, A. H. 1883—January 23—271,064. Keyboard Attachment.

Hammond, A. H. 1883—May 8—277,129; September 11—284,844. Mechanical Musical Instrument.

Hammond, A. H. 1884—April 1—296,165. Perforating Machine.

Harcourt, S. R., and Hosley. 1903—August 18—736,600. Accentuation Mechanism.

Harrington, W. M. 1903—October 13—741,400. Mechanical Music Roll.

Hart, A. L. 1904—February 26—752,221. Perforating Mechanism.

Hartling, P. H. 1886—April 27—340,876. Mechanical Musical Instrument.

Hauschild, M. 1895—January 1—531,933. Mechanical Musical Instrument.

Hawkins, G. B. 1885—April 14—315,774—Mechanical Musical Instrument.

Haywood, G. W. 1903—December 22—747,551. Mechanical Musical Instrument.

Hedgeland, F. W. 1895—October 1—547,072. Electric Control for Musical Instrument.

Hedgeland, F. W. 1897—November 9—593,215. Wind Engine.

Hedgeland, F. W. 1898—November 8—613,924; December 13—615,850. Music Roll Mechanism. November 29—614,864. Regulating Device.

Hedgeland, F. W. 1899—July 25—629,361. Regulating Mechanism.

Hedgeland, F. W. 1903—May 5—726,913. Pneumatic Action.

Herr, H. A. 1899—April 11—622,680. Regulating Device.

Hock, M. 1885—February 24—312,636. Mechanical Musical Instrument.

Hofinghoff, E. H. 1890—April 29—426,812. Keyboard Attachment.

Horton, Henry B. 1878—December 3—American Player, Beaten by McTammany as Infringement. 59.

Horton, H. B. 1884—June 17—300,368. Perforating Machine.

Hoschke, W. H. 1894—December 18—531,037. Automatic Musical Instrument.

Hosley, N. D., and Harcourt. 1903—August 18—736,600. Accentuation Mechanism.

Hoster, T. G. 1897—January 5—574,426. Mechanical Musical Instrument.

Hunt, A. F., and Bradish. 1849—January 9—American Player, Incomplete Idea, 22. Abandoned.

Imhof, D. 1895—May 28—540,059. Automatic Musical Instrument.

Jenkins, S. 1883—June 26—280,043. Keyboard Attachment.

Jewell, M. R., and Powers. 1904—March 1—753,809. Mechanical Musical Instrument.

Jones, L. W. 1904—December 27—778,365. Mechanical Musical Instrument.

Juelg, H. H. 1903—December 1—745,500. Interchangeable Roll.

Junghaus, Arthur. 1901—June 11—676,002. Mechanical Musical Instrument.

Junod-Turin, A. 1903—January 6—717,581. Mechanical Musical Instrument.

Keller, A. 1898—March 1—599,710. Mechanical Musical Instrument.

Keller, A. 1904—February 23—752,683. Controlling Mechanism.

Kelly, G. B. 1886—October 12—350,747. Perforated Music Sheet. 1886—October 12—350,748.

Kelly, G. B. 1887—January 25—356,690. Mechanical Musical Instrument.

Kelly, G. B. 1887—February 15—357,933. Air Engine.

Kelly, G. B. 1894—April 3—517,805. Automatic Musical Instrument.

Kelly, G. B. 1901—December 3—688,253. Mechanical Music Roll.

Kelly, G. B. 1903—January 13—718,256. Mechanical Music Roll.

Kelly, G. B. 1904—December 20—777,956; December 20—777,957. Mechanical Music Spool.

Kendall, C. B. 1898—June 28—606,219. Auto Pneumatic Action.

Kendall, C. B., and Tirrell. 1898—June 28—606,220. Musical Instrument Picker.

Kenyon, T. E. 1887—February 22—358,157. Mechanical Musical Instrument.

Klaber, E. 1900—October 23—660,381. Tone Modulating Device.

Klaber, E. 1901—April 2—671,216. Loud and Soft Pedal.

Klaber, E. 1901—April 2—671,217. Tune Sheet Support.

Klaber, E. H. 1904—May 10—759,532. Note Striking Mechanism.

Kleemicher, E. R. 1901—December 17—688,866. Mechanical Musical Instrument.

Kretschmar, C. 1887—March 19—360,163. Mechanical Musical Instrument.

Kropp, Charles C. 1893—July 25—502,099. Keyboard Attachment.

Kruft, J. 1902—December 2—715,089. Mechanical Musical Instrument.

Kuster, C. A. 1887—April 19—361,299; April 19—361,300; May 24—363,400. Mechanical Musical Instrument.

Kuster, C. A. 1900—January 9—640,922. Mechanical Musical Instrument.

Kuster, C. A. 1900—January 30—642,564. Perforating Machine.

Labor, T., Tesdel and Morris. 1887—May 31—363,841. Mechanical Musical Instrument.

Lacape, J. 1883—February 13—272,269. Mechanical Musical Instrument.

Latewlere, A. A. 1898—August 30—610,141. Music Recording Mechanism.

Leup, W., and Suter. 1903—December 22—747,802. Mechanical Musical Instrument.

Lochmann, O. P. 1886—October 12—350,541. Mechanical Musical Instrument.

Lochmann, O. P. 1893—January 17—510,115. Mechanical Musical Instrument.

Logan, M. S. 1902—April 22—698,298. Music Marking and Reading.

Long, J. W. 1885—June 16—320,148. Keyboard Attachment.

Lorentz, H. 1886—January 5—333,645. Mecnanical Musical Instrument.

Lorenz, W. A., and De Lue. 1898—June 28—606,222. Musical Instrument Picker.

Lowmiller, A. 1888—January 17—376,443. Mechanical Musical Instrument.

Lyle, R. W. 1894—November 27—529,928. Mechanical Musical Instrument.

McIntire, A. A. 1887—January 11—355,880. Mechanical Musical Instrument.

Macaulay, T. A. 1889—April 9—401,187; April 9—401,188. Mechanical Musical Instrument.

Macaulay, T. A. 1896—July 21—564,384; July 21—564,385; July 21—564,386; July 21—564,387. Mechanical Musical Instrument.

Mansfield, H. H. 1901—November 12—686,664. Mechanical Music Spool.

Marshall, D. K. 1901—July 9—678,318; July 9—678,319. Mechanical Musical Instrument.

Marshman, N. R. 1883—May 8—277,309. Mechanical Musical Instrument.

Marshman, N. R. 1884—February 5—293,184. Perforating Machine.

Marshman, Newman R., and Mathews. 1878—October 29—American Player, Beaten by McTammany as Infringement. 57.

Mathews, Mason J., and Marshman. 1878—October 29—American Player, Beaten by McTammany as Infringement. 57.

Maxfield, J. 1884—December 2—308,619. Keyboard Attachment.

Maxfield, J. 1885—November 24—330,913. Perforating Machine.

Meahl, P. J. 1900—July 24—654,473. Recorder and Duplicator.

Meinhold, T. 1885—November 3—329,473. Mechanical Musical Instrument.

Metzger, J. 1883—January 16—270,686. Mechanical Musical Instrument.

Meyer, H. 1903—December 1—745,881. Perforating Mechanism.

Meyer, H. 1904—July 10—765,503. Music Sheet Drive.

Meyering, C. T. 1885—September 15—326,444. Keyboard Attachment.

Miller, B. 1900—April 24—648,277. Pneumatic Action.

Moore, H. R. 1901—July 16—684,845. Tracker Board.

Morgan, J. 1884—December 2—308,624. Music Machine for Creasing Paper.

Morris, H. B., Tesdel and Labor. 1887—May 31—363,841. Mechanical Musical Instrument.

Morse, Justinian. 1731—April 13—English Player, Dream of, Abandoned. 1-122.

Muller, H. 1900—September 11—657,560. Mechanical Musical Instrument.

Muller, J. L. 1891—September 15—459,590. Mechanical Musical Instrument.

Muller, J. L. 1892—August 16—480,854. Mechanical Musical Action.

McTammany, John. 1876—September 6—American, Caveat 1866, Player, Complete Essentials, Manufactured for Sale. 29.

McTammany, John, Jr. 1883—February 27—273,120; March 13—273,870; September 4—284,315. Mechanical Musical Instrument.

McTammany, John. 1883—December 25—290,697. Automatic Musical Instrument. Mechanical Musical Instrument, 36.

McTammany, John. 1885—July 7—321,738. Mechanical Musical Instrument.

McTammany, John. 1885—October 20—328,503. Mechanical Musical Instrumment.

McTammany, John. 1887—December 13—374,616. Mechanical Musical Instrument.

McTammany, John. 1888—October 2. American Individual Pneumatic Action, 67.

McTammany, John. 1888—October 2. American, Improved Pneumatic Action, 64.

McTammany, John. 1888—October 2—390,385; October 2—390,386. Mechanical Musical Instrument, 67.

McTammany, John. 1889—March 26—American, Individual Pneumatic Action, 67.

McTammany, John. 1889—March 26—400,102. Mechanical Musical Instrument, 67.

McTammany, John. 1890—March 11—422,964. Mechanical Indicator.

McTammany, John. 1902—January 28—692,207. Mechanical Musical Instrument.

McTammany, John. 1902—January 28—692,208. Mechanical Musical Instrument.

McTammany, John. 1902—July 29—705,952. Mechanical Musical Instrument.

Needham, Elias P., and Fowler. 1881—February 22. American Individual Pneumatic Action, 68.

Needham, O. H. 1879—March 18. American, Individual Pneumatic Action, 68.

Norcross, E. R. 1889—May 14—403,481. Mechanical Musical Instrument.

Norris, A. F. 1904—June 14—762,489. Foot Pedal Mechanism.

Nunn, A. W. 1903—July 14—733,738. Mechanical Music Spool.

O'Connor, J. 1900—November 13—661,920. Mechanical Musical Instrument.

O'Neill, E. T. 1884—May 27—299,492. Keyboard Attachment.

O'Neill, E. T. 1885—April 28—316,908. Keyboard Attachment.

Pain, R. W. 1883—January 16—270,606. Mechanical Musical Instrument.

Pain, R. W. 1885—July 21—322,544. Mechanical Musical Instrument.

Pain, R. W. 1886—February 2—335,534. Mechanical Musical Instrument.

Pain, R. W. 1887—January 18—356,422; January 25—356,599. Mechanical Musical Instrument.

Pain, R. W. 1889—October 8—412,657. Mechanical Musical Instrument.

Pain, R. W. 1889—December 17—417,680. Mechanical Musical Instrument.

Pain, R. W., and Tremaine. 1896—April 21—558,562. Mechanical Musical Instrument.

Pain, R. W. 1897—September 7—589,535. Electrical Musical Instrument.

Pain, R. W. 1898—March 22—601,161; March 22—601,162. Automatic Music Roll.

Pain, R. W. 1898—March 22—601,163. Mechanical Musical Instrument.

Pain, R. W. 1902—November 18—713,676. Melody Stop.

Pain, R. W. 1903—April 14—725,358. Music Sheet.

Pain, R. W. 1903—July 28—734,596. Mechanical Music Roll.

Pain, R. W. 1903—January 6—717,907. Melody Stop.

Pain, R. W. 1903—May 26—728,966. Primary Pneumatic Action.

Pain, R. W. 1904—February 23—752,920. Expression Mechanism.

Pain, R. W. 1904—March 15—754,886. Expression Mechanism.

Pain, R. W. 1904—August 2—766,516. Accentuating Mechanism.

Pain, W. S. 1903—April 14—725,358. Perforated Sheet Cutter.

Pain, W. S. 1904—July 19—765,591. Mechanical Music Spool.

Pain, W. S. 1904—August 16—767,830. Mechanical Music Spool.

Panezo, I., and Calcano. 1892—January 26—467,854. Recording Mechanism.

Panholzer, J. 1901—May 28—674,875. Mechanical Musical Instrument.

Pape, M. 1851—December 20. English Player, Incomplete, Attachment, Abandoned, 26.

Parker, W. D. 1886—December 28—355,201. Air Engine.

Parker, W. D. 1887—January 4—355,336. Pneumatic Action.

Parker, W. D. 1887—August 9—368,164; August 9—368,165. Pneumatic Action.

Parker, W. D. 1888—December 4—394,005; December 4—394,006. Pneumatic Action.

Parkin, F. W. 1903—June 16—731,214. Portable Music Sheet.

Parr, E. 1887—March 15—359,279. Mechanical Musical Instrument.

Perkins, E. R. 1904—September 13—770,103. Mechanical Music Sheet.

Petching, E. A. 1904—June 7—62,083. Mechanical Musical Instrument.

Peterson, A. 1893—January 10—489,568. Perforated Music Sheet.

Peterson, C. E. 1902—November 4—712,844. Keyboard Attachment.

Philips, E. C. 1902—October 21—711,674. Mechanical Musical Instrument.

Philips, E. C. 1904—August 9—767,362. Perforating Mechanism.

Philips, E. C. 1904—August 9—767,363. Perforating Mechanism.
Phillips, J. D. 1903—June 9—730,565. Pneumatic Action.
Pietschmann, C. 1892—March 29—471,559. Mechanical Musical Instrument.
Pietschmann, C. 1892—March 29—471,559. Mechanical Musical Instrument.
Pietschmann, F. 1887—May 24—363,480. Mechanical Musical Instrument.
Pietschmann, F. 1892—May 17—474,999. Mechanical Musical Instrument.
Pietschmann, F. 1893—February 7—491,223. Mechanical Musical Instrument.
Plessing, T. A. 1899—March 21—621,372. Mechanical Musical Instrument.
Powers, T. B., and Jewell, M. R. 1904—March 1—753,809. Mechanical Musical Instrument.
Prehmer, P. H., and Dernell. 1897—September 7—589,644. Detachable Pedal Mechanism.
Prince, G. E. 1903—April 28—726,754. Recording Apparatus.
Pritchard, G. H., and Ahlstrom. 1887—May 17—363,082. Pneumatic Action.
Puttman, F. P., and Claus. 1896—July 14—563,800. Mechanical Musical Instrument.
Puttman, F. B., Claus and Felix. 1896—December 29—574,240. Mechanical Musical Instrument.
Racca, G., and Seward. 1887—February 8—357,502. Mechanical Musical Instrument.
Reed, W. S. 1896—April 14—558,419. Mechanical Musical Instrument.
Rees, W. H. 1903—July 21—734,193. Pneumatic Selecting Mechanism.
Rees, W. H. 1904—February 9—751,755. Mechanical Musical Instrument.
Rees, W. H. 1904—February 9—751,808. Mechanical Musical Instrument.
Reickert, B. 1895—June 18—541,123. Perforated Music Sheet.
Reichardt, H. C. 1895—August 13—544,322. Tracker Bar.
Reichardt, H. C. 1896—April 28—558,985; September 22—568,278. Pneumatic Action.
Richards, H. 1887—May 3—364,041. Mechanical Musical Instrument.
Richter, A. 1895—December 31—552,303. Mechanical Musical Instrument.
Richter, A. 1896—May 19—560,283. Mechanical Musical Instrument.
Richter, A. 1896—May 19—560,540. Mechanical Music Sheet.
Richter, A. 1898—June 7—605,134. Mechanical Musical Instrument.
Rissman, L. O. 1903—March 17—722,904. Recording Apparatus.
Riessner, E. P. 1896—October 13—569,233. Mechanical Musical Instrument.
Riessner, E. P. 1901—February 19—668,217. Mechanical Musical Instrument.
Rivoire, A. 1895—April 23—537,937. Music Recorder.
Rollins, W. H. 1896—July 7—563,415. Mechanical Musical Instrument.
Rollins, W. H. 1899—March 14—621,289. Mechanical Musical Instrument.
Roth, A. P. 1903—October 13—741,072. Sheet Feeding Mechanism.
Saint, R. M. 1896—December 8—572,571. Music Writer Mechanism.
Salyer, H. M. 1900—July 10—653,263. Keyboard Attachment.
Salyer, H. M. 1901—November 12—686,682. Pneumatic Key.
Salyer, H. M. 1902—May 27—700,829. Keyboard Attachment.
Salyer, H. M. 1902—May 27—700,830. Keyboard Attachment.
Salyer, H. M. 1902—June 17—702,887. Perforating Apparatus.
Salyer, H. M. 1902—July 1—703,743. Keyboard Attachment.
Salyer, H. M. 1902—October 14—711,004. Keyboard Attachment.
Salyer, H. M. 1903—July 28—734,963. Keyboard Attachment.
Salyer, H. M. 1903—July 28—734,964. Keyboard Attachment.
Sanders, J. E. 1897—November 2—593,165. Tune Sheet Mechanism.
Schaut, F. 1895—January 8—532,290. Automatic Note Sheet.
Schilling, E. 1891—April 14—450,257. Mechanical Musical Instrument.
Schippers, F. 1904—March 29—755,944. Mechanical Musical Instrument.
Schmid, C. 1898—April 26—602,961. Music Making Mechanism.
Schmoele, H. 1883—February 13—272,090. Mechanical Music Roll.
Schmoele, William F., and Henry. 1873—October 16. American Player, Electric Organ, Abandoned, 55.
Schneider, F. 1901—February 26—668,885. Mechanical Musical Instrument.
Schoenstein, F. F. 1903—October 6—740,993. Pneumatic Action.
Schwertner, J. 1883—May 8—277,067. Keyboard Attachment.
Schwesinger, H. 1901—April 2—671,239. Pneumatic Self-Acting.
Seiler, E. 1900—January 23—641,800. Foot Pedal Mechanism.
Seville, A. S. 1904—December 13—777,551. Music Scale.
Seward, W., and Racca. 1887—February 8—357,502. Mechanical Musical Instrument.
Seytre, Claude Felix. 1842—January 24—French Player, Incomplete Idea, Abandoned, 5.
Schaeffer, A. 1890—February 11—421,033. Mechanical Musical Instrument.
Shaffer, C. A. 1904—May 3—758,860. Note Sheet Mechanism.
Shaffer, C. A. 1904—May 3—758,861. Note Sheet.
Shaffer, C. A. 1904—November 1—773,598. Mechanical Musical Instrument.
Sharps, H. E. 1902—April 1—696,762. Mechanical Musical Instrument.

Sharps, H. E. 1904—(Reissue) April 26—12,215. Mechanical Musical Instrument.

Sharps, H. E., and Cooper. 1902—April 15—697,754. Spring Motor.

Sharps, H. E., and Cooper. 1904—April 12—757,095. Wind Engine.

Sharps, H. E., and Cooper. 1904—July 5—764,352. Controlling Mechanism.

Sharps, H. E., and Cooper, W. T., Jr. 1904—(Reissue) November 22—12,289. Spring Motor.

Shaw, C. H. 1902—September 16—709,054. Music Sheet.

Sibley, J. T. 1904—January 5—748,801. Tracker Bar.

Singer, P. S. 1893—July 18—501,510. Electrical Musical Instrument.

Skinner, E. M. 1901—January 29—667,039. Mechanical Musical Instrument.

Skinner, E. M. 1902—December 9—715,307. Tracker Board.

Skinner, E. M. 1903—April 14—725,595. Electrical Musical Instrument.

Shaw, W. 1885—July 14—322,013. Music Sheet, Mechanical.

Smith, H. M. 1903—February 24—721,248. Mechanical Musical Instrument.

Smith, Irving B. 1904—December 13—502,099. Expression Mechanism.

Smith, J. D. 1904—March 29—756,070. Feeding Mechanism.

Smith, R. T. 1883—October 23—287,062. Perforating Machine.

Smith, R. T. 1885—May 19—318,049. Perforating Machine.

Smith, R. T. 1886—July 27—346,236, 346,237, 346,238. Keyboard Attachment.

Smith, S. B. 1904—December 13—777,153. Electric Contact.

Sorgan, O. 1896—December 1—572,458. Mechanical Musical Instrument.

Spaethe, O. 1884—April 1—296,238. Perforating Machine.

Spaethe, W. O. 1891—August 11—457,445. Mechanical Musical Instrument.

Stanley, L. T. 1885—July 21—322,566. Mechanical Musical Instrument.

Stine, Wm. 1903—July 14—733,764. Mechanical Musical Instrument.

Stocker, L. 1897—September 28—590,918. Mechanical Musical Instrument.

Stone, Frank. 1885—September 15—326,172. Mechanical Musical Instrument.

Stone, Frank. 1886—December 7—353,894. Pneumatic Action.

Stone, Frank. 1888—December 18—394,794. Mechanical Musical Instrument.

Stone, Frank. 1886—December 28—355,229. Air Engine.

Stowell, B. F. 1903—November 10—743,992. Pneumatic Action.

Strum, E. G. 1886—November 30—353,434. Mechanical Musical Instrument.

Styles, E. H., and Wood. 1902—June 17—702,898. Mechanical Musical Instrument.

Suter, J., and Leuk. 1903—December 22—747,802. Mechanical Musical Instrument.

Sylvan, E. W. 1889—February 12—397,877. Attachment for Musical Instrument.

Taft, F. 1904—August 10—767,722. Perforating Mechanism.

Taft, F. 1904—December 20—778,205. Mechanical Music Sheet.

Taylor, H. S., and Chinnock. 1887—December 27—375,531. Mechanical Musical Instrument.

Terrell, J. P., and Gilman. 1904—June 28—763,877. Mechanical Musical Instrument.

Tesdel, S. R., Morris and Labor. 1887—May 31—363,841. Mechanical Musical Instrument.

Thibouville, L. E. J. 1888—April 3—380,608. Mechanical Musical Instrument.

Thomas, H. 1885—September 29—327,038. Music Sheet and Roll.

Thorens, H. 1901—September 3—681,895. Mechanical Musical Instrument.

Thorpe, W. 1883—July 24—281,947. Keyboard Attachment.

Tirrell, J. P., and Kendall. 1898—June 28—606,220. Musical Instrument Picker.

Tirrell, J. P. 1898—October 18—612,597. Pneumatic Action.

Tracey, J. B. 1896—October 27—570,352. Roll Making Mechanism.

Tracey, J. B. 1903—June 2—729,977. Regulating Mechanism.

Treat, J. E. 1886—February 2—335,549. Mechanical Musical Instrument.

Treat, J. E. 1887—September 6—369,667—Mechanical Musical Instrument.

Tremaine, H. B. 1903—June 2—729,928. Keyboard Attachment.

Tremaine, W. B. 1888—January 17—376,725. Mechanical Musical Instrument.

Tremaine, W. B., and Pain. 1896—January 7—552,796. Mechanical Musical Instrument.

Tschofen, A. 1903—October 20—742,102. Keyboard Attachment.

Turner, S. B. 1900—October 2—658,902; October 2—659,113. Music Chart Mechanism.

Turner, S. B. 1901—October 22—684,960. Music Sheet Mechanism.

Turner, S. B. 1904—August 9—766,979. Music Chart Mechanism.

Utt, L. 1894—December 4—530,369. Keyboard Attachment.

Van Dusen, George W. 1867—December 10—American Player, Incomplete, 53. (Abandoned.)

Van Dusen, G. W. 1887—May 24—363,564. Mechanical Musical Instrument.

Van Dusen, G. W. 1890—November 18—440,979. Mechanical Musical Instrument.

Venerto, R. L. 1901—September 3—681,939. Electrical Musical Instrument.

Verdier, M. E. 1898—April 12—602,248. Keyboard Attachment.

Vernaz, A. 1896—August 11—565,650. Perforating Mechanism.

Votey, E. S. 1899—September 26—639,594. Bellows.
Votey, E. S. 1902—March 25—696,216. Keyboard Attachment.
Votey, E. S. 1902—August 19—707,283. Operating Sheet.
Votey, E. S. 1902—October 28—712,162. Tracker Bar.
Votey, E. S. 1902—December 3—717,146. Mechanical Musical Instrument.
Votey, E. S. 1903—November 3—743,118. Sheet Adjuster. 1903—October 27—742,760. Expression Mechanism.
Votey, E. S. 1904—February 2—751,229. Mechanical Musical Instrument.
Votey, E. S. 1904—August 16—767,781; 1904—December 13—777,226. Expression Mechanism.
Wales, A. 1886—April 6—339,237. Mechanical Musical Instrument.
Wallace, F. A. 1897—March 23—579,201. Keyboard Attachment.
Weir, W. T. 1884—September 9—304,981. Keyboard Attachment.
Welin, P. 1899. November 21—637,540. Take-up Spool.
Welin, P. 1901—October 1—683,825. Mechanical Musical Instrument.
Welin, P. 1902—March 4—694,450. Mechanical Music Roll.
Welin, P. 1903—May 12—727,725; December 29—748,126. Keyboard Attachment.
Welin, P. 1904—August 23—768,414. Mechanical Musical Instrument.
Wellner, J. 1897—June 29—585,246—Mechanical Musical Instrument.
Wellner, J. 1901—January 29—666,834. Mechanical Musical Instrument.
Wells, G. T. 1888—November 27—393,456. Mechanical Musical Instrument.
Welte, E. 1883—October 30, 287,599. Mechanical Musical Instrument.
Welte, M. 1897—March 2—578,127. Mechanical Musical Instrument.
Weser, J. A. 1900—May 1—648,717; May 15—649,623. Mechanical Musical Instrument.
Weser, J. A. 1901—September 3—681,764. Mechanical Musical Instrument.
White, F. C. 1904—May 10—759,575. Mechanical Music Sheet.
White, F. C. 1904—August 2—759,576. Division Indicator.
White, F. C. 1904—July 5—764,221. Mechanical Musical Instrument.
Whitehead, A. E. 1901—October 29—680,546—Keyboard Attachment.
Whitehead, A. E. 1901—October 1—683,717. Winding and Rewinding Mechanism.
Whitlick, J. W. 1900—September 18—658,134. Mechanical Musical Instrument.
Wier, M. A. 1885—October 6—327,628; October 27—329,419; October 27—329,420. Keyboard Attachment.
Wood, F. W., and Styles. 1902—June 17—702,898. Mechanical Musical Instrument.
Wright, M. S. 1898—January 4—596,730. Mechanical Musical Instrument.
Wright, M. S. 1899—October 10—634,601; December 5—638,615. Mechanical Musical Instrument.
Wright, M. S. 1904—August 16—767,673. Mechanical Music Spool.
Wright, M. S. 1904—August 16—767,672; September 6—769,424. Pneumatic Action.
Wuest, P., Jr. 1895—January 1—531,890. Electrically Controlled Musical Instrument.
Wuest, P., Jr. 1903—June 16—731,261. Music Sheet Spool.
Wuest, P., Jr. 1903—November 24—744,990. Music Sheet Spool.
Wyckoff, F. R. 1903—June 16—731,008. Mechanical Music Roll.
Wyckoff, F. R. 1903—July 14—733,528. Keyboard Attachment.
Young, F. L. 1902—February 11—692,968. Music Instrument Control.
Young, F. L. 1902—February 11—692,968. Expression Mark.
Young, F. L. 1903—January 13—718,410. Mechanical Music Roll.
Young, F. L. 1903—June 2—729,988. Transposing Mechanism.
Young, F. L. 1903—November 3—743,130. Accentuating Mechanism.
Zabekow, O. 1883—December 25—290,726. Mechanical Musical Instrument.
Zeitler, T. A., and Cocchi. 1892—January 26—467,572. Mechanical Attachment.
Zollner, T. 1893—April 4—494,664. Mechanical Musical Instrument.